364-23-036-2

6-Digit Up/Down Scaling Counter with Preset Function

# DT-601CG

## Operation Manual

Read this manual thoroughly prior to usage.

Use this instrument only after reading the manual completely. Follow all safety precautions.

NIDEC DRIVE TECHNOLOGY CORPORATION

## Safety Precautions.

Please be sure to follow all safety precautions closely.

Be sure to read the entire instruction manual thoroughly before initial set-up, operation and maintenance.

This instruction manual provides two grades of safety warnings: "Danger" and " Caution".
Be sure to follow these precautions.

| | |
|---|---|
| Danger | Misusing or disregarding the instructions with this mark might cause death, severe injury, or fire. |
| Caution | Misusing or disregarding the instructions might cause property damage or minor injury. However, depending on the situation, it might lead to greater outcome. |

Below are the explanations of each cautions to be followed.

The act indicated by this sign is strictly prohibited.

The act indicated by this sign must be executed by no means.

| Caution | |
|---|---|
| NEVER EXCEED SPECIFIED VOLTAGE | NEVER EXCEED RATED LOAD |
| AVOID DIRECT SUNLIGHT | DO NOT USE IN THE PLACE WITH FLAMMABLE OBJECTS AND GAS |
| AVOID HUMIDITY AND CONDENSATION | DO NOT DROP OR SHAKE |
| AVOID CONTAMINATION | KEEP AWAY FROM ELECTRIC WIRE. |
| BE CAREFUL NOT TO GET ELECTROCUTED | DO NOT TOUCH TERMINALS WHILE THE POWER IS ON. |
| DO NOT DISSEMBLE OR TOUCH INTERNAL PARTS WHILE THE POWER IS ON | |

## OPTION NAME

| Model name | Disp - lay | 90° Input | Output | | Input | | | Sensor power supply | power supply | External BCD switch unit | function |
|---|---|---|---|---|---|---|---|---|---|---|---|
| DT-601CG | | | | | | | | | | | Alarm output : Two-points NPN output : OUT 1,2<br>Alarm output : Two-points PhotoMOS relay output : OUT 3,4 |
| | Blank | | | | | | | | | | 7 segments LED (RED) |
| | | RE | | | | | | | | | 90° phase difference input |
| | | RE-2T | | | | | | | | | 90° phase difference input (Input two multiplying) |
| | | RE-4T | | | | | | | | | 90° phase difference input (Input four multiplying) |
| | | | AV3 | | | | | | | | Voltage output (1 to 5Vdc, 5 to 1Vdc) |
| | | | AV4 | | | | | | | | Voltage output (0 to 5Vdc, 5 to 0Vdc) |
| | | | AV5 | | | | | | | | Voltage output (0 to 10Vdc, 10 to 0Vdc) |
| | | | AI | | | | | | | | Current output (4 to 20mAdc, 20 to 4mAdc) |
| | | | | B* | | | | | | | BCD output |
| | | | | | BI* | | | | | | BCD input |
| | | | | | | Blank | | | | | NPN Open collector pulse input |
| | | | | | | F | | | | | Voltage pulse input |
| | | | | | | V3 | | | | | Sine wave input (0.8 to 80Vpp) |
| | | | | | | N | | | | | Sine wave input (0.05 to 20Vpp) |
| | | | | | | L1 | | | | | Line receiver 1-phase |
| | | | | | | L2 | | | | | Line receiver 2-phase |
| | | | | | | | HI | | | | High speed input (0.01Hz to 120kHz) |
| | | | | | | | | Blank | | | 12Vdc sensor power supply |
| | | | | | | | | S24 | | | 24Vdc sensor power supply |
| | | | | | | | | | Blank | | AC Power source (85to264Vac) |
| | | | | | | | | | DC | | DC Power source (12to24Vdc) |
| | | | | | | | | | | 4L | Signed 4-digit type (BI option required) |
| | | | | | | | | | | 6L | Signed 6-digit type (BI option required) |

***Option B and Option B1 cannot be chosen simultaneously.**

### About model type

e.g1) Choose analog current output, voltage pulse input and DC power supply.
Model type will be **DT-601CG-AI-F-DC**

e.g2) Choose analog voltage output (0 to 5V), 90°phase difference input, sensor power supply 24Vdc.
Model type will be **DT-601CG-RE-AV4-S24**

INDEX


| | PAGE |
|---|---|
| 1. Summary | 2 |
| 2. Specification | 4 |
| 3. Meter installation | 6 |
| 4. Names and functions of each parts in the front. | 7 |
| 5. Connecting terminal block | 9 |
| 6. Input circuits | 12 |
| 7. Output circuits | 13 |
| 8. Setting up the dip switch | 14 |
| 9. Setting menu | 15 |
| 10. Initially set value and initialization | 16 |
| 11. Contents of each mode and setting | 17 |
| 12. Setting of preset value | 40 |

## 1. SUMMARY

This instrument is a Reversible integrating counter with calculation function

**<Timing chart of each preset output operation>**

**(1) +2stages preset operation**

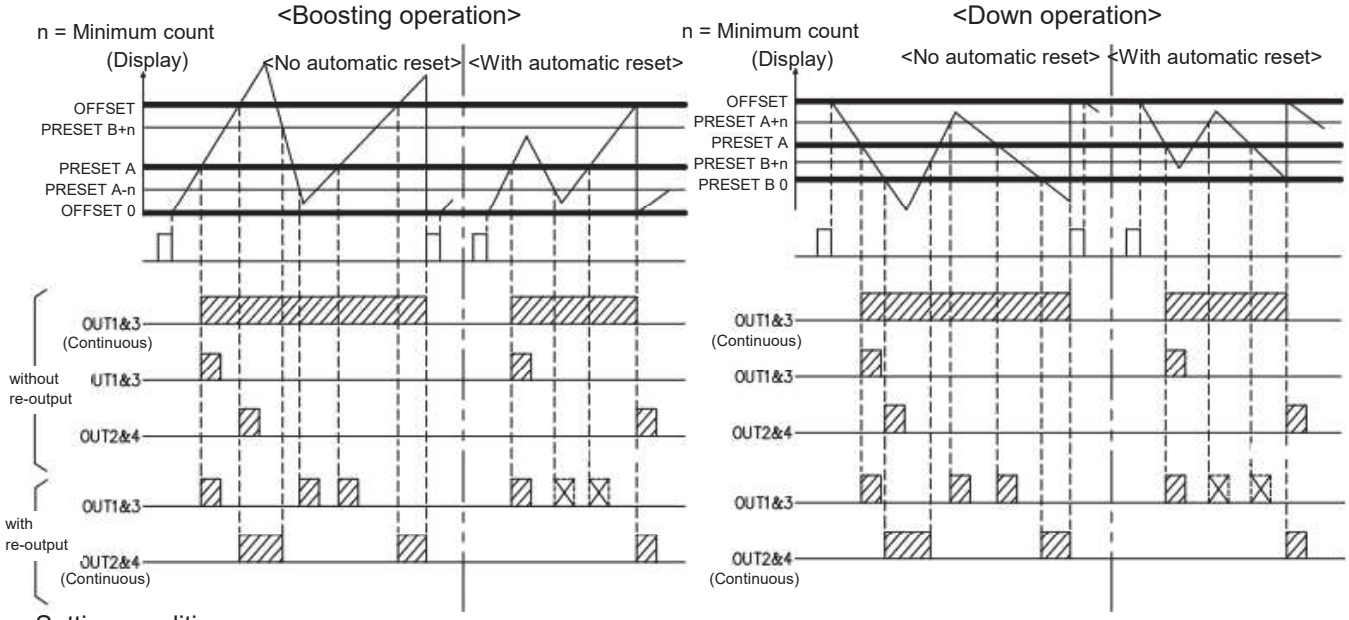


Setting condition

OFFSET = 0 , OFFSET < PRESET A < PRESET B  PRESET B = 0 , PRESET B < PRESET A < OFFSET

**(2) ±Each 1stage preset operation**

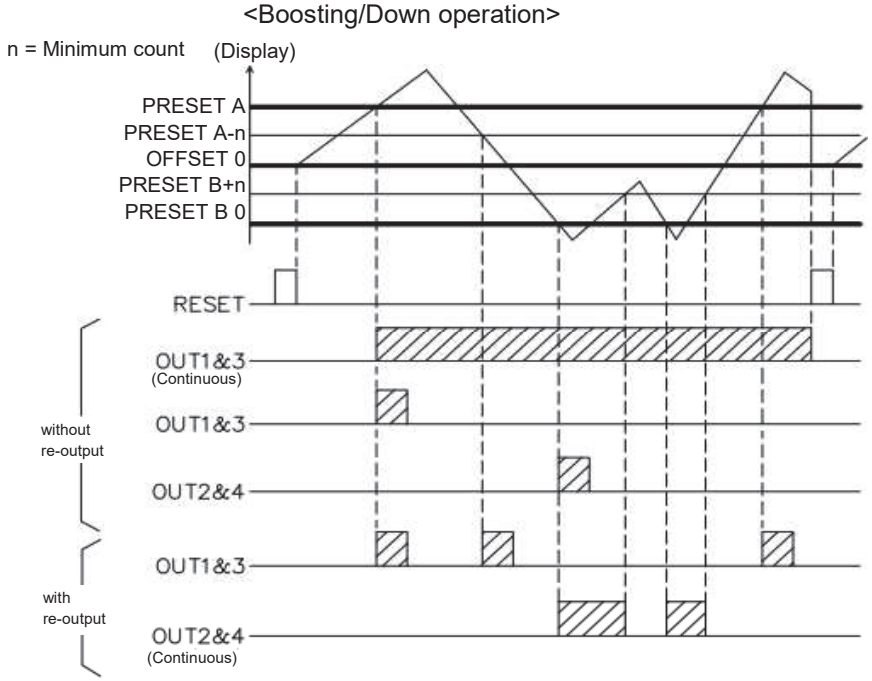


Setting condition

Up/Down, and Automatic reset setting will be invalid

OFFSET = 0 , OFFSET < 0 , PRESET B < OFFSET < PRESET A

### (3) Batch count operation

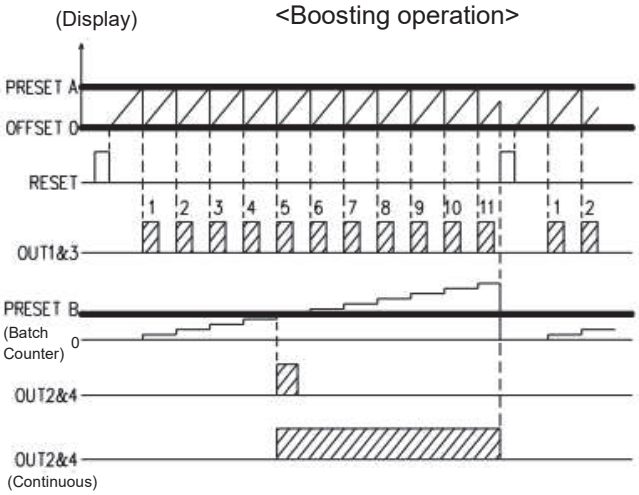


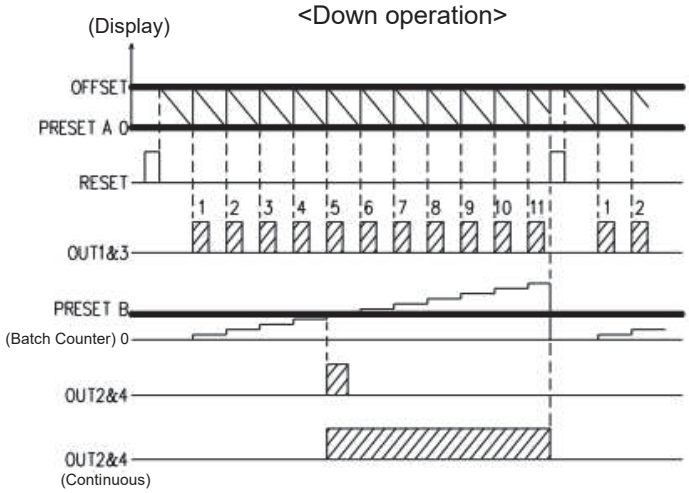


Setting condition

Automatic reset selection and re-output selection will be invalid

OFFSET = 0, OFFSET < PRESET A, PRESET B > 0

PRESET A = 0, PRESET A < OFFSET, PRESET B > 0

### (4) +1stage plus secondary output operation

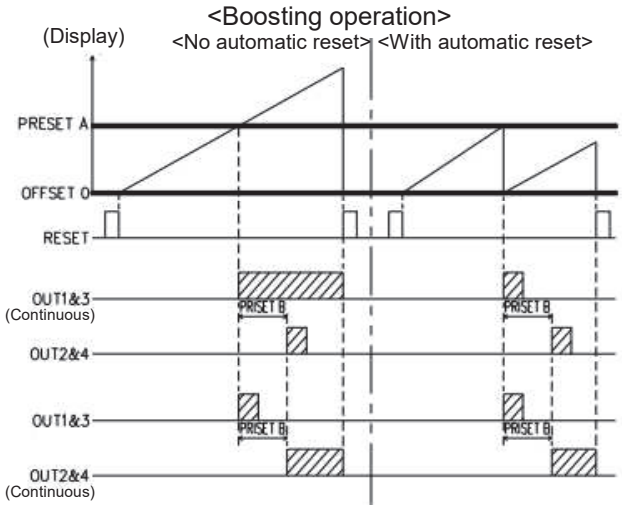


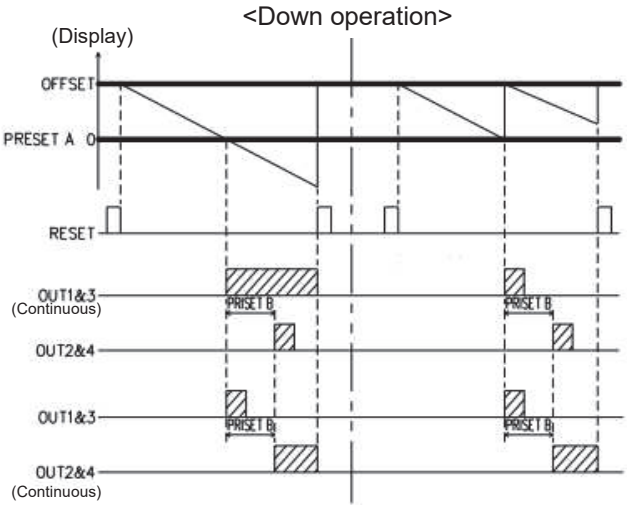


Setting condition

Re-output selection will be invalid.

OFFSET = 0, OFFSET < PRESET A, 99.9 ≧ PRESET B ≧ 0

PRESET A = 0, OFFSET > PRESET A , 99.9 ≧ PRESET B ≧ 0

**<Output condition of each preset output>**

In principle, 1 shot or continuous shot will be output from OUT1 to OUT4 under the condition of "count display ≧( ≦)Preset A (PresetB)

However, if +2stages preset operation or ±1stage preset operation was chosen, and used with the condition of "with re-output" or "without automatic reset", the condition will be as below irrespectively of the mode chosen (UP/DOWN).

Output set ON (continuous, 1 shot) : Count display ≤(≥) Preset A(Preset B)

↓

Output set OFF (continuous, 1 shot*) : Count display <(>) Preset A(Preset B)

* choosing 1shot makes output "ON"

## 2. SPECIFICATIONS

### [Standard]

| | ITEM | SPECIFICATIONS |
|---|---|---|
| Integrated display | Scaling | $1x10^{-9}$ to 9999 (selectable) |
| | Accuracy | ±0 (when the scaling is set to 1) |
| | Display | Six digits LED (characters are 14mm high and RED) |
| | Display Switch | Display 1 : D1 LED (green) is on, Display 2 : D2 LED(green)<br>(Change with ENT key) |
| | Display Range | -99999 to 999999 |
| | overscale Display | 3rd round stop (exceed the value three time, 999999 or -99999 will blink<br>Choose from "endless" or "display the number of time value exceeds"<br>(while pressing the Up key, top 2digits will be displayed) |
| | Number of decimal setting | Selectable up to thousandth |
| | Reset | Hit RST key in the front part or input reset at terminal block.<br>(depending on the mode, select reset display) |
| | Display offset | By setting the display offset value,<br>display value after reset can be chosen from -99999 to 999999 |
| Sensor Input | Input signal<br>Option : Type F | NPN open collector pulse input (Min. 10mA), or non-voltage contact<br>Voltage pulse input (LOW: <2V, HI: 3.8 to 30V) |
| | Option : Type V3 | Sine wave input (0.8 to 80Vpp, Max. 3kHz) |
| | Option : Type N | Sine wave input (0.05 to 20Vpp, Max. 3kHz) |
| | Option : Type L1 | Line receiver 1-phase |
| | Option : Type L2 | Line receiver 2-phase |
| | Sensor input response | LOW: 0.01 to 50HZ, MID : 0.01 to 1kHz, HI: 0.01Hz to 10kHz duty 50%<br>(Selectable by dip switches) |
| | Option : Type HI | 0.01Hz to 120kHz duty 50% |
| | Sensor power supply | 12Vdc (±10%) Max. 100mA output |
| | Option : Type S24 | 24Vdc (±10%) Max.60mA output |
| External Input | Reset Input | Terminal block(4-3) to be ON more than 50ms<br>(accept NPN open collector pulse output or non-voltage contact output) |
| | Hold selection input | Select from Forbidden, Hold, Lap count, display exchange<br>Forbidden, Hold can be activated while terminal block(2-3) is ON. Toa<br>To activate Lap count and display change, turn the terminal block(2-3) more than 50ms.<br>(accept NPN open collector pulse output or non-voltage contact output) |
| Preset Output | Output terminal/ style<br>(OUT 1, 2) | Output from terminal block 9-6(OUT1) and 10-6(OUT2)<br>(6 is GND common) (However, with the line receiver, it will not function)<br>Two-points NPN open collector pulse output. Maximum rating<br>: 30Vdc 50mA |
| | Output terminal/ style<br>(OUT 3,4) | Output from terminal block 15-16(OUT3) and 17-18(OUT4)<br>Two-points PhotoMOS relay "a" contact output. Rated load current<br>: 0.12A Load voltage: 140Vac |
| | Preset operation | Selectable from + side 2stages,<br>± 1stage, batch count and +1stage secondary output |
| | Output mode | Selectable from 1shot or continuous |
| | 1shot period | Selectable from 10ms, 20ms, 50ms, 100ms, 200ms, 250ms, 500ms, 750ms, 1s, 2s |
| | Preset value setting | Selectable from -99999 to 999999. When delaying the secondary output,<br>selectable from 0.0 to 99.9. (the value outside the range is invalid) |
| | Output timing | Judge by comparing display value and preset value |
| | Output display | During the OUT1 alarm output is on,<br>OUT 1 LED (RED) will be synchronously flushing |
| | Output reset | Activate by RST key in the front part or ,<br>making terminal reset input ON more than 50ms |
| | Batch count display | Display range is 0 to 999999 when selecting batch count operation<br>or pressing Shift key (when it exceeds, 999999 will be flushing) |
| | Others | Selecting UP/DOWN mode, automatic reset re-output can be set. |

| | | |
|---|---|---|
| Others | Mode Protect function | Activate by Key operation (mode setting cannot be changed) |
| | Data backup | Write the each mode's set value and calculation value on to FRAM.<br>(over writing should be less than 10million times, about 10years conservation) |
| | Power source | 85 to 264Vac ( 50 / 60Hz ) |
| | Option : DC type | 12 to 24Vdc ( ±10% ) |
| | Operating humidity | 0 to 50℃ , 30 to 80%RH (non condensing) |
| | Weight, dimensions | 400g W96xH48xD130mm ( W3.78"xH1.89"xD5.12" ) |
| | Case material | Chassis: mixed with ABS resin glass Terminal block |
| | Body color | Black |
| | Protection grade | IP66 equivalent |
| | Accessory | Terminal block cover 2pcs : main body attachment (material: acrylic, transparent), Rubber packing (material: NBR, black), Unit rebel |

**[Option specification]**
**<Analog output : AV/VI option>**

| | | |
|---|---|---|
| Analog output | Output terminal | From terminal block 19-20 |
| | Voltage output | 1 to 5Vdc / 0 to 5Vdc / 0 to 10Vdc<br>Load resistance more than 2kΩ |
| | Current output | 4 to 20mAdc<br>Load resistance less than 500Ω |
| | Output accuracy | Within ±0.3%(23°C) against displayed value (absolute value) |
| | Temperature | ±100ppm/℃ |
| | Output respond | about 50ms ( as a duration to reach 90% output change) |
| | Maximum output resolution | 12bit, D/A conversion system 4000 resolution<br>*maximum output range: up to 102.4% of each output's maximum value.<br>*with analog output, calculation is done against the displayed value with 7-segments LED. This might lower the revolution below 4000 depending on the mode setting. |
| | Reverse output | Reverse the voltage output(AV3-5) and current output (AI).<br>*With reverse output, maximum resolution is 4000 for each output style. |

**<BCD output : Option B>**

| | | |
|---|---|---|
| BCD Output | Output terminal | From BCD option collector (37pin) |
| | Output style | Whole digit parallel, NPN open collector pulse output |
| | Output timing | Synchronized with the display refresh |
| | Output action | With the output level "H", shunt with GND |
| | TI (Ban-loading) signal | Output with about 25ms width when data is refreshed |
| | Output logic | Data value and TI signal, positive/negative selectable |
| | Rating | 30Vdc, 10mA Max. |
| | Accessory | D-sub37 pin male (soldered type) and connector hood |

**<BCD input : Option BI>**

| | | |
|---|---|---|
| BCD Input | Input terminal | From BCD option connector (37pin) |
| | Input style | Whole digit parallel, NPN open collector pulse input |
| | Input timing | With calculation cycle |
| | Input action | Shunt the necessary digit's terminals with GND. |
| | Latch signal | while inputting latch signal, data loading is prohibited |
| | Input logic | Data value, latch signal, positive/negative selectable |
| | Rating | outflow electricity is about 3mA when shunting each input terminals |
| | Accessory | D-sub37 pin male (soldered type) and connector hood |

## 3. METER INSTALLATION

(1) Cut the panel and insert the meter from the front part.
 * When you need a splash proof,
 insert the attached splash proof packing between meter and installation panel.

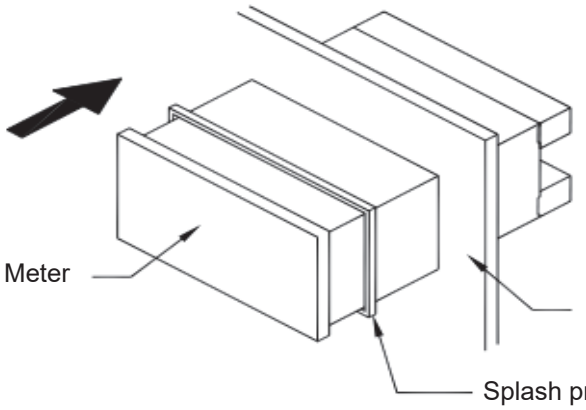


Dimensions of panel

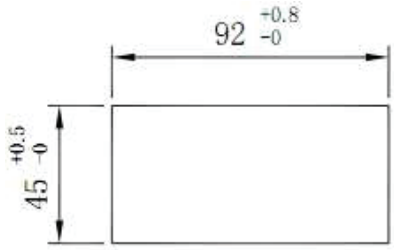


(2) Insert the attachment lugs in both sides of the meter.

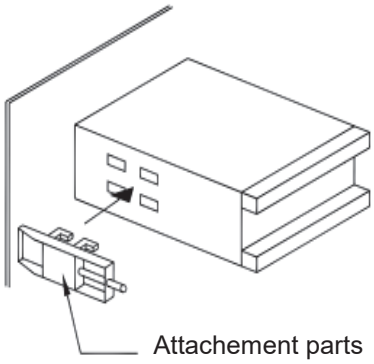


(3) Slide the attachment lugs to the back(towards the terminal block side),
 and turn the screw to steady the meter. (both sides)

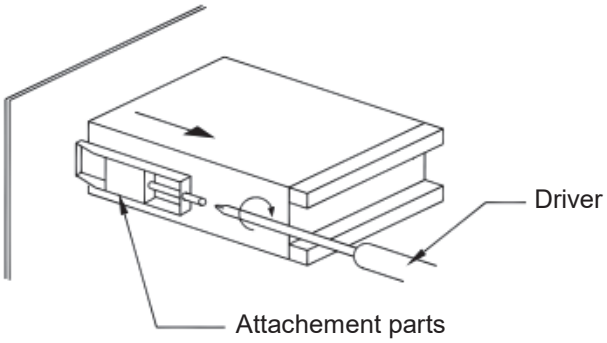


NOTE :
1. Make sure to horizontally installed
2. Panel has to be 1.0mm to 4.0mm thick.
3. Do not tighten the screw too much. The case might break.

## 4. NAMES AND FUNCTIONS OF EACH PARTS IN THE FRONT.

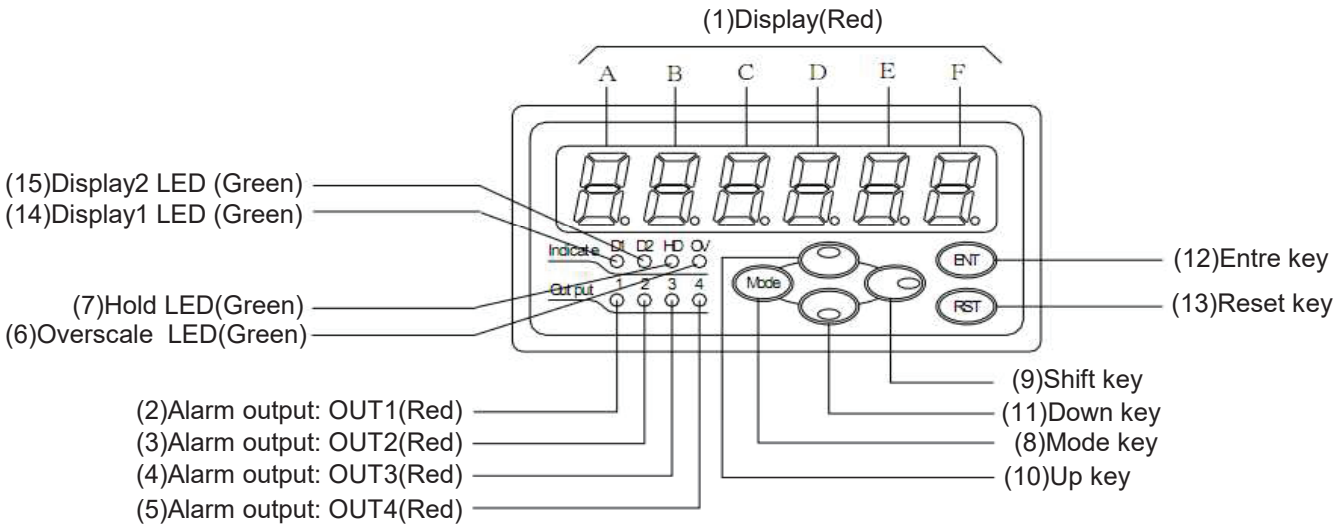


**(1) Display (A to F)**

While measuring : Indicate the measured value of Display 1(D1) or Display 2(D2)

While setting : While setting modes, Display A and B indicate mode number and C to F indicate setting value

: While setting preset value, display indicates current value

: While setting the display offset value, display indicates current value

**(2)-(5) OUT1- 4 Alarm output LED**

Synchronically flash when the OUT1 to 4's alarm was output

**(6) Overscale LED**

Flash when the value exceed 999999 or below -99999.

**(7) Hold LED**

Flash when there is external input (shunt terminal block #2 and #3)

**(8) Mode Key** (Mode)

While turning on : TEST mode is activated when power is turned on while pressing this key (To escape from TEST mode, turn off the power)

While measuring : Mode setting is activated when Shift key is pressed more than 2seconds while pressing this key.

: Preset value setting is activated when the key is pressed more than 2seconds.

: Display offset value setting is activated when Up key is pressed more than 2seconds while pressing this key.

While setting : Mode number (Display A, B) can be changed over

: While setting preset value, preset number (PRESET A to B) can be switched over.

**(9) Shift key**

While measuring : Activate the mode setting (press with the mode key more than 2seconds)
Batch count number will be displayed while pressing this key.
(while selecting batch count mode)

While setting : Shift the decimal place towards right hand side.

**(10) Up key**

While measuring : Activate display offset value (press with the mode key more than 2seconds)
While pressing this key, number of times exceeded the limit is indicated.

While setting : Change the value while setting (UP side)

**(11) Down key**

While setting : Change the value while setting (DOWN side)
: Activate or modify mode protect function

**(12) Enter key** ENT

While turning on : Format the each set values by turning on while pressing this key

While measuring : Change the display from Display 1(D1) and Display 2(D2)

While setting : While setting, value will be registered with this key and return to the measuring display

**(13) Reset key** RST

While measuring : Switch back the display to "ZERO" or cancel the alarm output
Switch back the batch count display to "ZERO"

While setting : While setting, value will not be registered with this key and return to the measuring display.

**(14) Display 1 LED**

Will flash when displaying the value of Display1 (D1)

**(15) Display 2 LED**

Will flash when displaying the value of Display2 (D2)

* D1 and D2 is the one chosen by the mode 00's measuring calculation

## 5. CONNECTING TERMINAL BLOCK

**<NPN open collector pulse, voltage pulse, 90°phase difference input>**

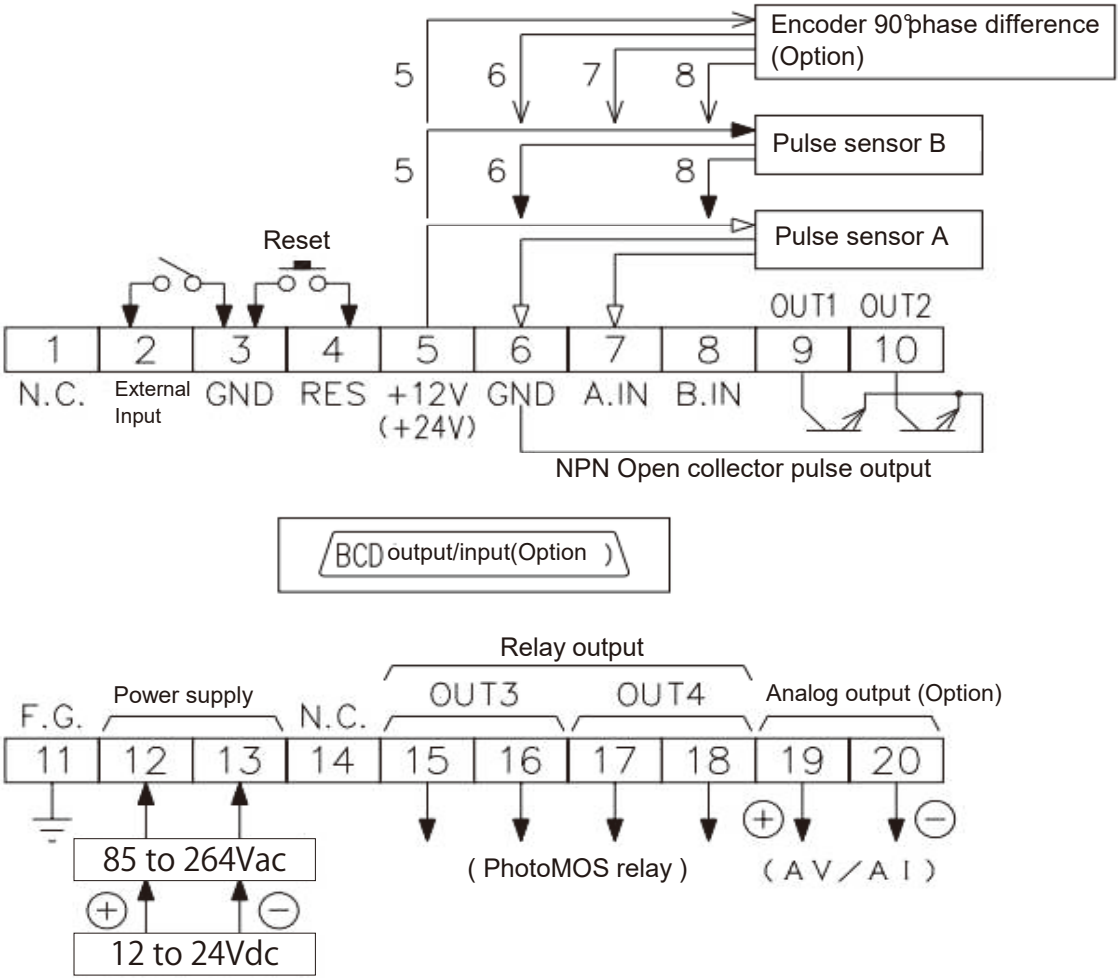


**Caution!**

(1) Check power supply
1. Be careful not to get a shock while wiring.
2. Pay attention if the unit is for AC power supply type or DC power supply type
3. In case of DC power supply, carefully check +,-. Do not connect other way round

(2) Check the names of terminals and wire them correctly

(3) Wiring differs depending on the sensors. Refer to the wiring diagram on P11.
Maximum power supply to sensor is 12Vdc 100mA (optionally: 24Vdc 60mA), never over load.
Wrong wiring might cause damages to sensor or circuit.

(4) Make sure to tighten the screws on the terminal block

(5) Sensor's power source should not be used for other usage.

**<Sinusoidal , sine curve, line receiver input>**

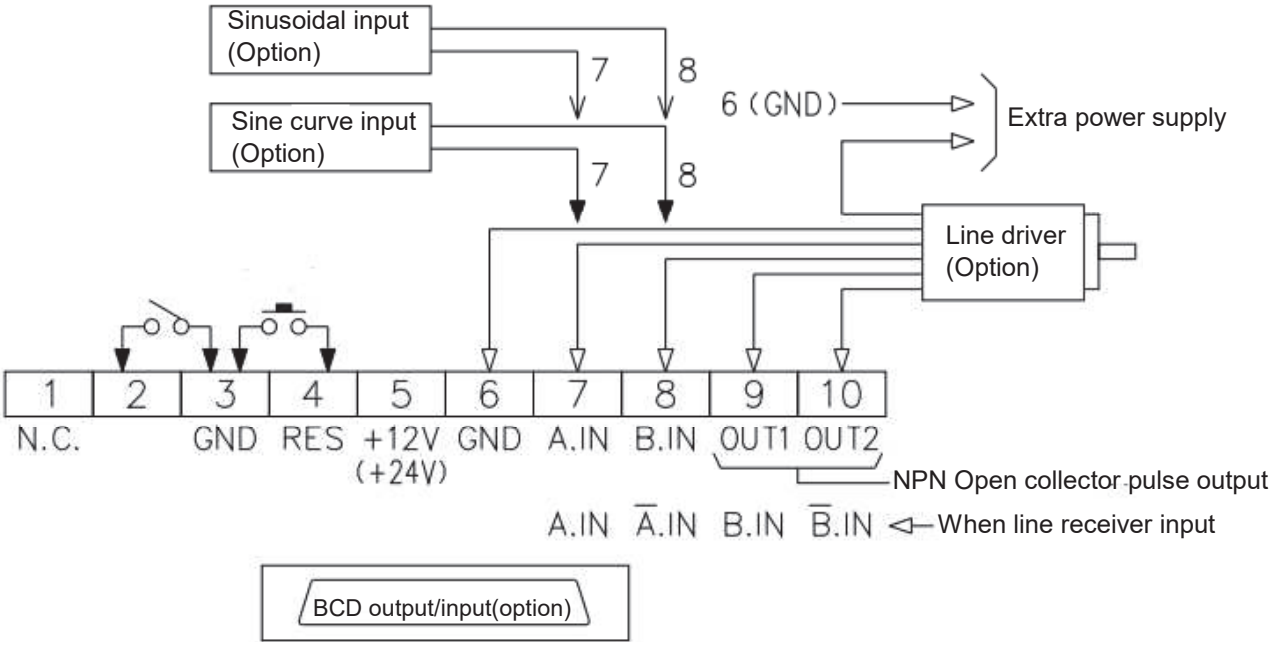


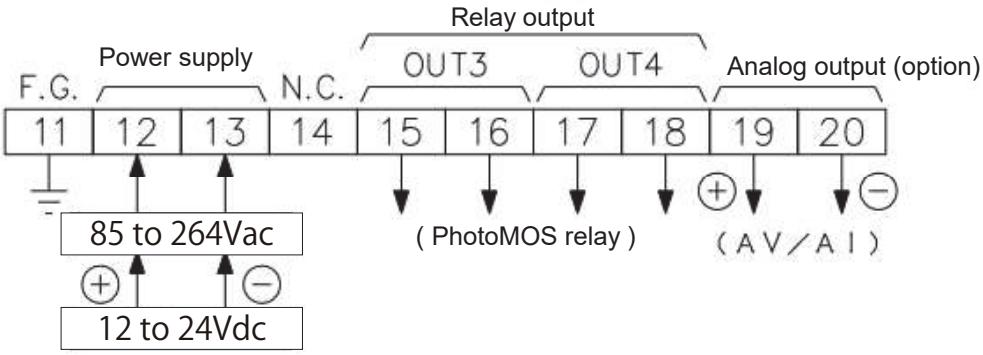


**Caution!**

(1) Check power supply
1. Be careful not to get a shock while wiring.
2. Pay attention if the unit is for AC power supply type or DC power supply type
3. In case of DC power supply, carefully check +,-. Do not connect other way round

(2) Check the names of terminals and wire them correctly

(3) Wiring differs depending on the sensors. Refer to the wiring diagram on P11.
Maximum power supply to sensor is 12Vdc 100mA (optionally: 24Vdc 60mA), never over load.
Wrong wiring might cause damages to sensor or circuit.

(4) Make sure to tighten the screws on the terminal block

(5) With line receiver input(L1,L2) type, terminal block #9 and #10 will be input terminal.
So alarm output OUT1 and OUT2 cannot be used.

(6) Sensor's power source should not be used for other usage.

<Connection diagrams for each sensor>

A. DC three wire style pulse sensor

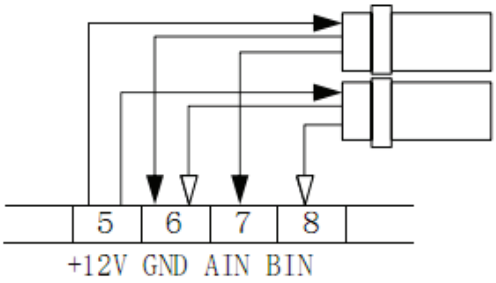


B. DC two wire style pulse sensor

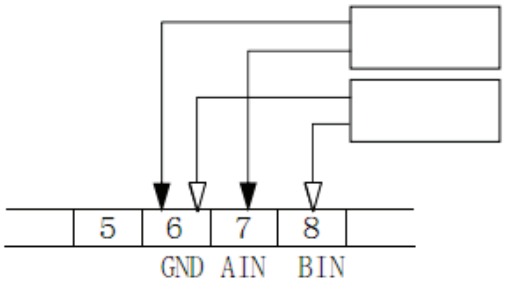


C. Non-voltage contact output sensor

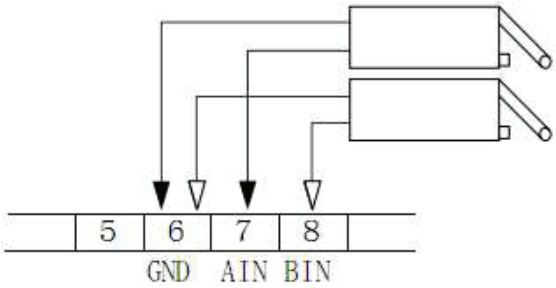


D. 90°phase difference input

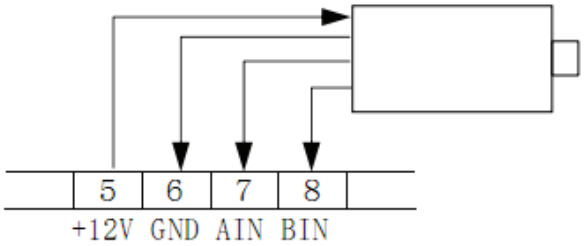


E. Sinusoidal /Sine curve input

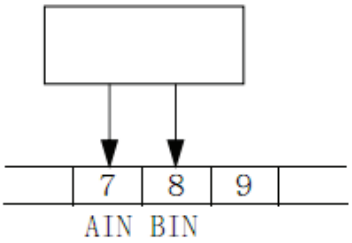


F. Line receiver input

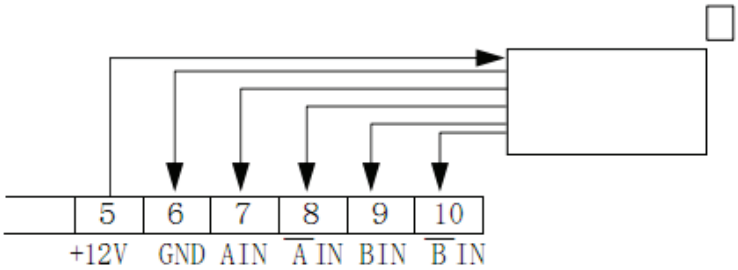


G. Three wire current modulated pulse sensor

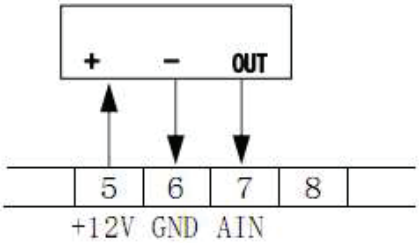


H. Two wire current modulated pulse sensor

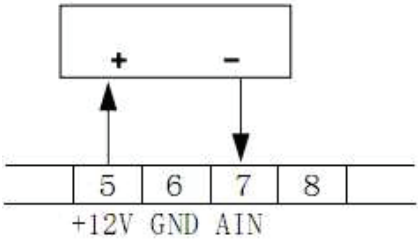

## 6. INPUT CIRCUITS

### (1) Sensor input: NPN open collector pulse input or non-voltage contact input

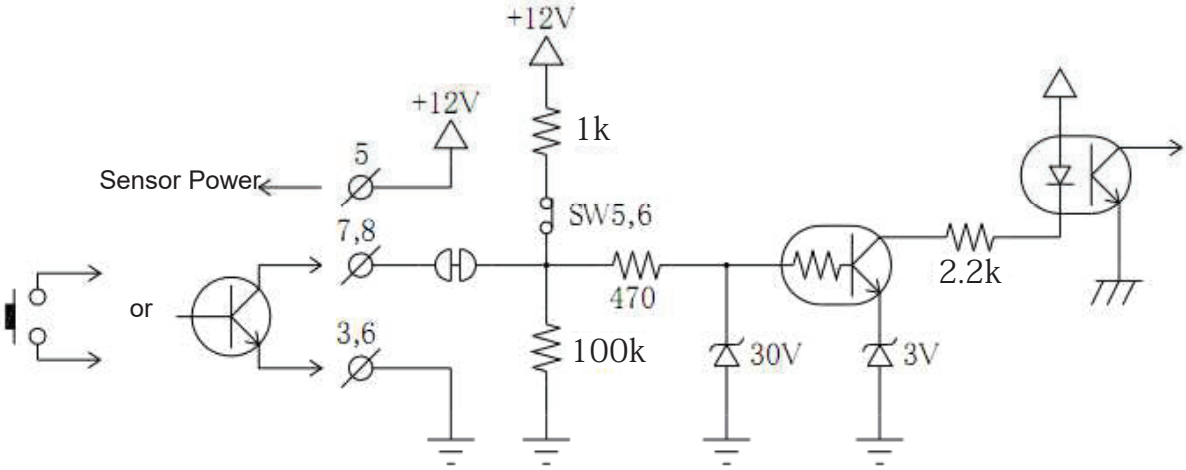


### (2) Sensor input : Voltage pulse input

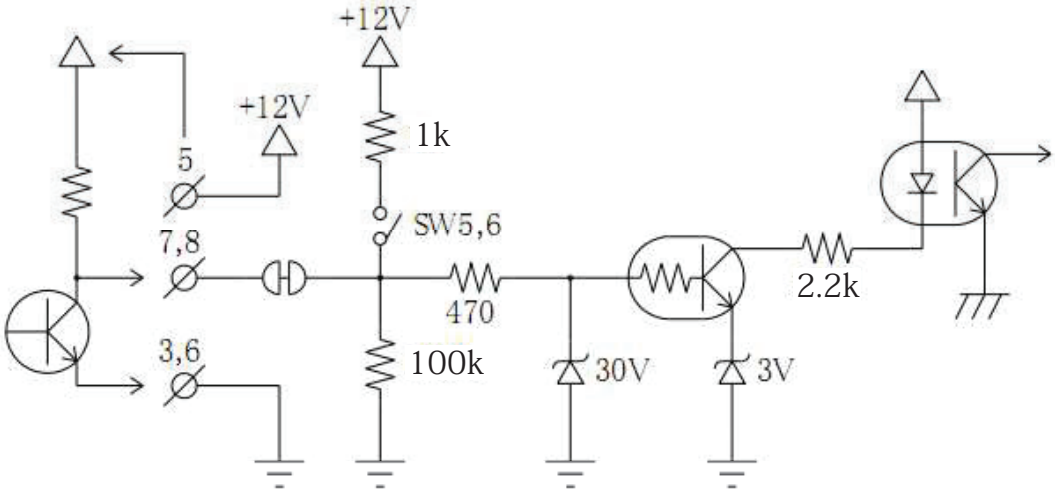


### (3) Reset/ External input (NPN open collector pulse input)

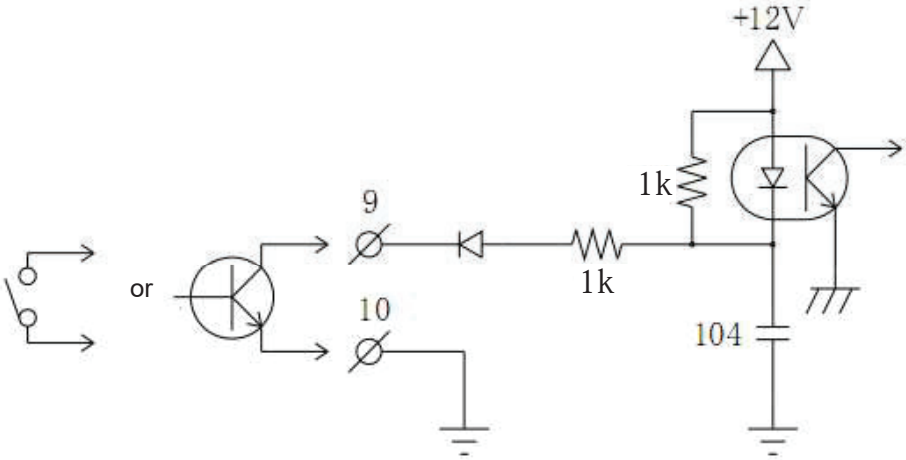

## 7. OUTPUT CIRCUITS

### (1) Alarm input (OUT1/OUT2): NPN Open collector pulse output

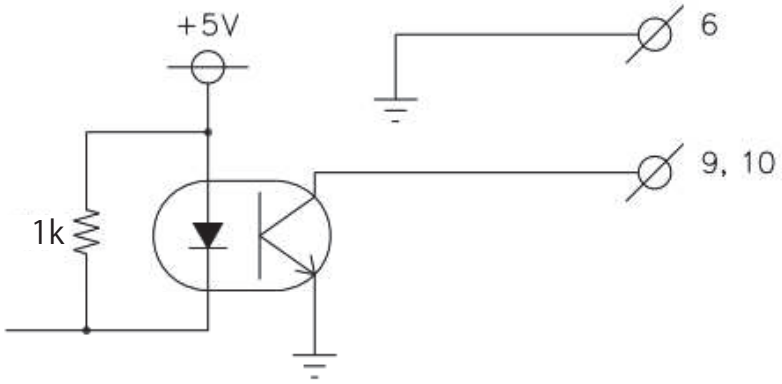


### (2) Alarm output (OUT3/ OUT4) : PhotoMOS relay output

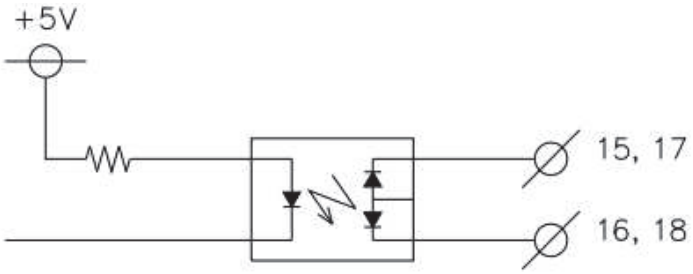

## 8. SETTING UP THE DIP SWITCH

Fig.1

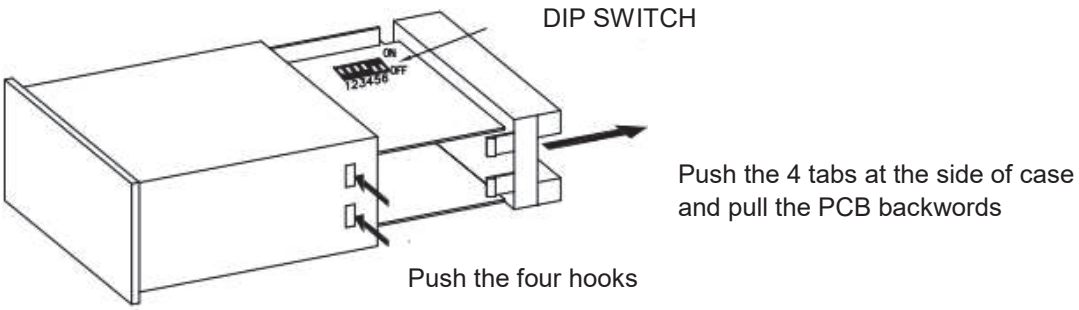


**Setting up the DIP Switch**

Dip switch setting can switch mode from input respond frequency, NPN open collector pulse input and Voltage pulse input

Table 1

| | B. IN | | A. IN | | B.IN | A.IN | OFF⇔ON |
|---|---|---|---|---|---|---|---|
| | 1 | 2 | 3 | 4 | 5 | 6 | |
| max. link ejecting frequency 0.01Hz-50Hz (LOW) | ON | OFF | OFF | ON | | | |
| max. link ejecting frequency 0.01Hz-1kHz (MID) | OFF | ON | ON | OFF | | | |
| max. link ejecting frequency 0.01Hz-10kHz (HI) | OFF | OFF | OFF | OFF | | | |
| max. link ejecting frequency 0.01Hz-120kHz (OP.) | OFF | OFF | OFF | OFF | | | |
| NPN Open Collector Pulse Input | | | | | ON | ON | black shows the setting |
| Voltage Pulse Input | | | | | OFF | OFF | |

(1) Dip switch can be found from the slit on the right side's corner of the main body. (Ref. Fig.1)
If it is not convenient to set, pull out the PCB from the case and do the setting.

(2) Following three kinds of input type has to be used with the factory preset mode;
Sinusoidal input (V3), sine curve input (N) and line receiver input(L1, L2).

(3) For 90°phase difference input (RE)type,
make sure to keep the factory preset mode (HI) for both A/B inout for respond frequency.

(4) Dip switch setting must be done by the combinations shown on the above chart.
The usage of the combination which is not indicated above might cause some error.

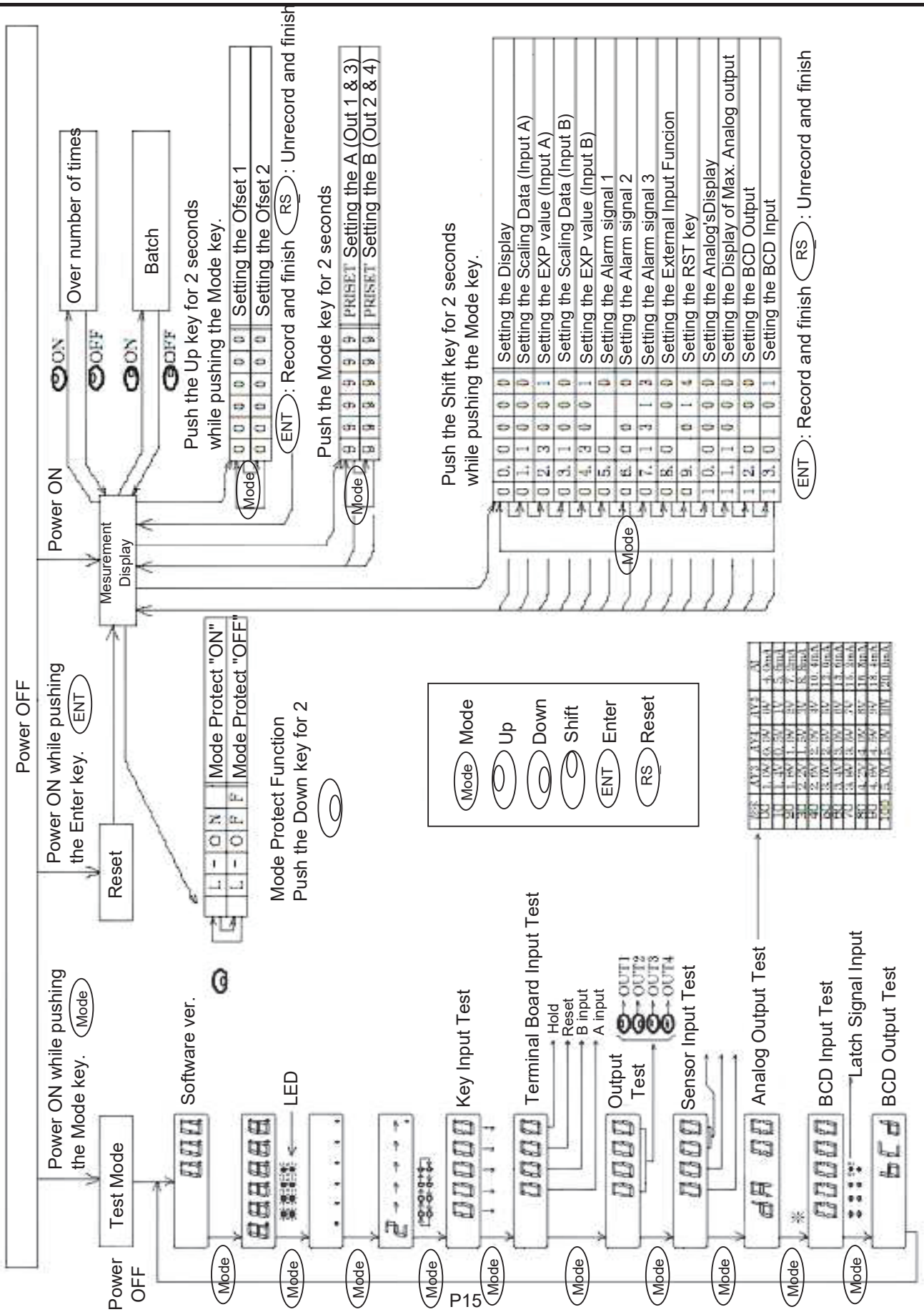
Power OFF
Power ON
Mesurement Display
Over number of times
Batch
ON
OFF
Push the Up key for 2 seconds while pushing the Mode key.
Setting the Ofset 1
Setting the Ofset 2
ENT : Record and finish
RS : Unrecord and finish
Push the Mode key for 2 seconds
PRESET Setting the A (Out 1 & 3)
PRESET Setting the B (Out 2 & 4)
Push the Shift key for 2 seconds while pushing the Mode key.
Setting the Display
Setting the Scaling Data (Input A)
Setting the EXP value (Input A)
Setting the Scaling Data (Input B)
Setting the EXP value (Input B)
Setting the Alarm signal 1
Setting the Alarm signal 2
Setting the Alarm signal 3
Setting the External Input Funcion
Setting the RST key
Setting the Analog'sDisplay
Setting the Display of Max. Analog output
Setting the BCD Output
Setting the BCD Input
Mode
Power ON while pushing the Enter key.
Reset
Mode Protect "ON"
Mode Protect "OFF"
Mode Protect Function
Push the Down key for 2
Up
Down
Shift
Enter
Reset
Power ON while pushing the Mode key.
Test Mode
Power OFF
Software ver.
LED
Key Input Test
Terminal Board Input Test
Hold
Reset
B input
A input
Output Test
OUT1
OUT2
OUT3
OUT4
Sensor Input Test
Analog Output Test
BCD Input Test
Latch Signal Input
BCD Output Test

## 10. INITIAL VALUE AND INITIALIZATION

If the special request was made prior to shipment, initial value is set as required.
Without the request, initial value is set as below.

**Set value for each mode**

| Mode # | | initial value | | | | memo | | | |
|---|---|---|---|---|---|---|---|---|---|
| A | B | C | D | E | F | | | | |
| 0 | 0. | 0 | 0 | 0 | 0 | | | | |
| 0 | 1. | 1 | 0 | 0 | 0 | | | | |
| 0 | 2. | 3 | 0 | 0 | 0 | | | | |
| 0 | 3. | 1 | 0 | 0 | 0 | | | | |
| 0 | 4. | 3 | 0 | 0 | 1 | | | | |
| 0 | 5. | 0 | - | - | 0 | | - | - | |
| 0 | 6. | 0 | 0 | - | 0 | | | - | |
| 0 | 7. | 1 | 3 | 1 | 3 | | | | |
| 0 | 8. | 0 | - | 0 | 0 | | - | | |
| 0 | 9. | - | 0 | 1 | 4 | - | | | |
| 1 | 0. | 0 | 0 | 0 | 0 | | | | |
| 1 | 1. | 1 | 0 | 0 | 0 | | | | |
| 1 | 2. | 0 | - | 0 | 0 | | - | | |
| 1 | 3. | 0 | - | 0 | 1 | | - | | |

**Each preset value**

| | initial value | | | | | | memo |
|---|---|---|---|---|---|---|---|
| PRESET A | 9 | 9 | 9 | 9 | 9 | 9 | |
| PRESET B | 9 | 9 | 9 | 9 | 9 | 9 | |

**Display offset value**

| | initial value | | | | | | memo |
|---|---|---|---|---|---|---|---|
| OFFSET 1 | 0 | 0 | 0 | 0 | 0 | 0 | |
| OFFSET 2 | 0 | 0 | 0 | 0 | 0 | 0 | |

**Mode protect setting value**

| Mode protect setting value | initial value | memo |
|---|---|---|
| | L - OFF | |

**Initialization**

Initialization can be done by turning the power on while pressing ENT key.
After the initialization, set value will be as chart 2, 3, 4 and 5.
calculation holding data and batch count data will be set as ZERO.

**Caution**

Initialization makes every current set value to be reset. Record the current value prior to the initialization.

* If the internal computer has interference due to some external factors such as noise, follow the above steps and do the initialization, then set the value as required.

## 11. CONTENTS OF EACH MODE AND SETTING METHOD

### 1. Key operations for each mode setting

| | Display | Operation procedure. |
|---|---|---|
| Mode + | A B C D E F<br>0 0. 0 0 0 0 | Press shift key more than 2seconds while pressing the mode key.<br>Display A/B will show [00] and mode [00] will be applied. |
| | A B C D E F<br>0 0. 0 0 0 0<br>→ → → | Change the position of flashing digit.<br>One hit makes 1digit move right hand side. |
| | A B C D E F<br>0 0. 0 0 0 0<br>↑<br>0～9 | Change the value of flashing digit.<br>One hit makes the value bigger by 1.<br>→0→1→2→…→8→9<br>Some digit might not go up til 9 depending on the setting item. |
| | A B C D E F<br>0 0. 0 0 0 0<br>↑<br>9～0 | Change the value of flashing digit.<br>One hit makes the value smaller by 1.<br>→9→8→7→…→1→0<br>Some digit might not go up til 9 depending on the setting item. |
| Mode | A B C D E F<br>0 1. 1 0 0 0<br>00～13 | Change the mode number. One hit chooses one mode further. In total, there are 13 modes.<br>→00→01→…→13→ |
| ENT | | Register the set value. After finishing the setting,register setting with this key. After registration, measurment display will appear. |
| RST | | Return to measurement display without registering the set value. |

**Caution**

1. Do not turn off the power while registering the set value
   (from pressing ENT until return to measurment display)

2. Turn OFF the mode protect while undergoing mode setting.
   With activating mode protect, set value cannot be changed.
   For more details of mode protect function, refer to P45.

## 2. Which mode to be set

1. Set the multiplying factor per one input signal.
   Mode 01(P.22) A inpu Setting of scaling data (converter)
   Mode 02(P.23) A inpu Setting of EXP value and frequency divider.
   Mode 03(P.24) B inpu Setting of scaling data (converter)
   Mode 04(P.24) B inpu Setting of EXP value and frequency divider.

2. About calculation and measurement method
   Mode 00 (P.19-21) setting of calculation measurement method
   * This setting is mandatory when RE option is chosen.
   Mode 08 (P.31-33) setting of overscale display

3. About alarm output (OUT1-4)
   Mode 05 (P.25-27) Setting of alarm output 1
   Mode 06 (P.28-29) Setting of alarm output 2
   Mode 07 (P.30) Setting of alarm output 3
   For the method of setting preset value, refer to P.43

4. About analog output (AV/AI option)
   Mode 10 (P.36) Analog output : setting of output style, output digit, reverse output, and output display
   Mode 11 (P.37) Analog output : setting of the display value at the maximum output

5. About the display
   (1) Display after the decimal point
   Mode 00 (P.19-21) Display 1 : position of decimal point Display 2 : setting of decimal point position
   (2) Clear the display
   Mode 08 (P.31-33) Setting of blank display
   (3) Change the arithmetic measurement display value after reset
   setting of display offset (P.44)
   (4) Clear the last measurement data while the power is on
   Mode 09 (P.34- 35) Reset mode while the power is on
   (5) Clear Display 1 or 2 while resetting
   Mode 09 (P.34-35) selection of reset display
   (6) Switch between display 1 and 2 by key input
   Mode 00 (P.19-21) Display selection
   (7) Switch between display 1 and 2 by external input
   Mode 08 (P.31-33) selection of external input functions

6. About other functions
   (1) About usage of external output (forbidden, hold, lapcount, display switch)
   Mode 08 (P.31-33) seleciton of external input fucctions
   (2) About reset key action
   Mode 09 (P.34-35) reset key action mode
   (3) Protect mode setting value
   Mode protect function
   (4) Output display value by BCD (B option)
   Mode 12 (P.38) Setting of BCD output
   (5) Input preset value by BCD (BI option)
   Mode 13 (P.39) setting of BCD input

### 3. Mode content and set value

| Mode# | Setting of display selection, measurement calculation, decimal position of display 1 and decimal position of display 2 |
|---|---|

**0 0**

| A | B | C | D | E | F |
|---|---|---|---|---|---|
| 0 | 0. | 0 | 0 | 0 | 0 |

**Display 2 decimal point position**

0 : 0
1 : 0.0
2 : 0.00
3 : 0.000

**Display 1 decimal point position**

0 : 0
1 : 0.0
2 : 0.00
3 : 0.000

**Measurement calculation method**

| No. | Display 1 | Display 2 |
|---|---|---|
| 0 | A - B | A |
| 1 | A + B | A |
| 2 | A or -A | ----- |
| 3 | A - B | B |
| 4 | A | B |
| 5 | A | -B |
| 6 | - A | -B |

* Choose from 90°phase difference input (RE)type, "0" or "3"

**Display selection**

0: Display 1 (fixed)
1: Display 2 (fixed)
2: Display 1/ Display 2 (selectable)

**<Display selection>**

Select from switching display or keeping it as fixed when pressing ENT key on the measurement display.

**<Measurement calculation method>**

| | |
|---|---|
| A | Add the signal which was entered to A input |
| - A | Deduct the signal which was entered to A input |
| B | Add the signal which was entered to B input |
| - B | Deduct the signal which was entered to B input |
| A - B | Add the signal which was entered to A input and deduct the signal which was entered to B input. |
| A + B | Add the signals which were entered to A and B input |
| A or - A | Add the signal which was entered to A input when B input was in LOW level and deduct the signal which was entered to A input when B input was in HI level. |

**<Decimal point position>**

Setting the display digits which are after the decimal point.

**0 0** **[ Measurement calculation method]**

0 : A-B (individual add-subtract input)

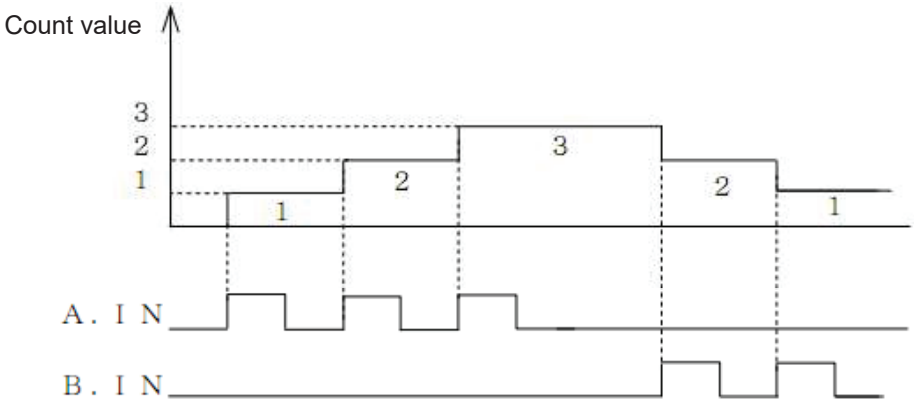

0 0

**0 : A-B (90°phase difference input with RE option)**

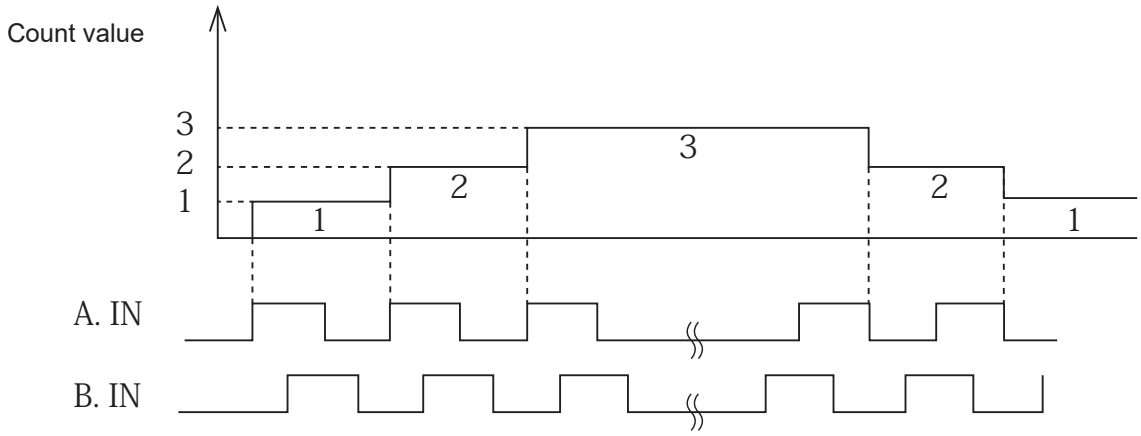


**1 : A+B**

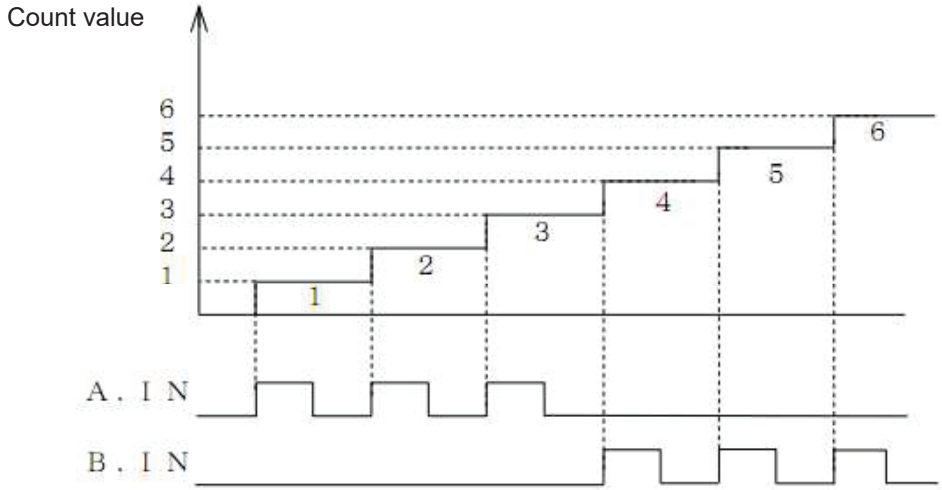


**2 : A or -A**

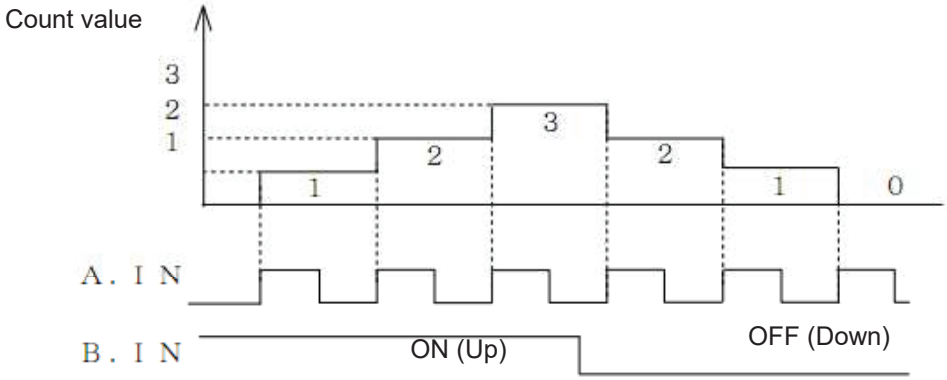


When B input is voltage pulse input, count will be UP (adding) and Down (subtraction) will be reveresal.

**<Caution>**
When this calculation method is chosen, do not set alarm display selection and display 2 of analog output display selection
If display 2 is set, it might output irrespective of display.

| Mode# | A input : Scaling data (Converter) setting |
|---|---|
| **0 1** | |

| A | B | C | D | E | F |
|---|---|---|---|---|---|
| 0 | 1. | 1 | 0 | 0 | 0 |

4digits value 0001 - 9999
( Do not set "0000" )

Function as scaling data (converter) for integrating measurement.
By setting the 4digit value and EXP value which is set by [Mode 02],
scaling factor per 1 signal can be set until $1x10^{-9}$ - 9999.

**[example]**

Want to display integrating value as "L" using the flow sensor which is 2.5ml per 1 pulse.

2.5mL → 0.0025L = 2500 × $10^{-6}$

Adjust the prefered unit (L)

4digits value

EXP value

Mode 01

| A | B | C | D | E | F |
|---|---|---|---|---|---|
| 0 | 1. | 2 | 5 | 0 | 0 |

Mode 02

| A | B | C | D | E | F |
|---|---|---|---|---|---|
| 0 | 2. | 6 | * | * | * |

| Mode# | A input : Setting of EXP value and frequency divider |
|---|---|

**0 2**

| A | B | C | D | E | F |
|---|---|---|---|---|---|
| 0 | 1. | 1 | 0 | 0 | 0 |

frequency divider : 3digits 1/1 - 1/999
(000 to be 1/1000)

EXP value ($10^{-n}$) n = 0 - 9

**[ EXP value]**

Setting of the ten's power (minus).
Combine with [Mode 01] and set the scaling data (converter).

**[Frequency divider]**

Set the input pulse. If the pulse per rotation is known, input that value.
The calculation will be more accurate.

**<caution>**

When using frequency divider, display turn to be ZERO or display offset value when reset.
However,the accumulated frequency divider value will not be erased.

**[example]**

When the frequency divider is set to 003(1/3), outcome will be as follows;
3 pulse output per 1 rotation, and 0.5m roller sending per 1 rotation.

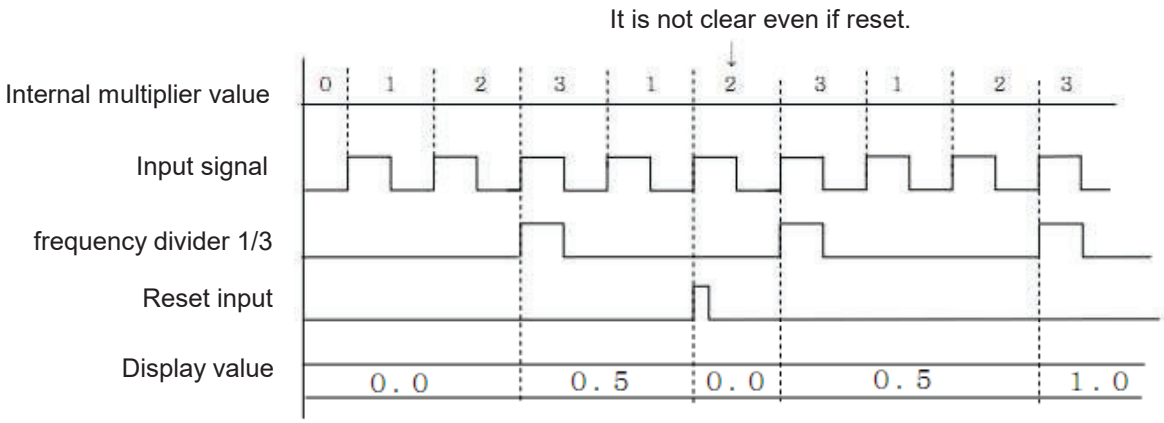


Using only scaling data (converter) might cause some error. In that case, divide the input.

Setting should be as follows

| | | | | | | |
|---|---|---|---|---|---|---|
| Mode 01 | 0 | 1. | 5 | 0 | 0 | 0 |
| Mode 02 | 0 | 2. | 4 | 0 | 0 | 3 |

0.5 = 5000x10-4
Frequency divider should be 3 as 1rotation produces 3pulse output.

With this, as sensor rotate once, integrated value will increase by 0.5.

**< Caution>**

In case of 90°phase difference input, same setting sh ould be applied to A/B input scaling data, EXP value, and frequency divider.

| Mode# | B Input: Setting of scaling data (converter) |
|---|---|
| **0 3** | |

| A | B | C | D | E | F |
|---|---|---|---|---|---|
| 0 | 3. | 1 | 0 | 0 | 0 |

4digits value 0001 - 9999
( Do not set "0000" )

Setting procedure is same as "Mode 01 [A input: Setting of scaling data (converter)]"

| Mode# | B Input: Setting of EXP value and frequency divider |
|---|---|
| **0 4** | |

| A | B | C | D | E | F |
|---|---|---|---|---|---|
| 0 | 4. | 3 | 0 | 0 | 1 |

frequency divider : 3digits 1/1 - 1/999
(000 to be 1/1000)

EXP value ($10^{-n}$) n = 0 - 9

Setting procedure is same as "Mode 02[A input: Setting of EXPvalue and frequency divider]"

| Mode# | Alarm output: Setting of alarm output 1 (OUT 1-4) |
|---|---|
| 0 5 | * **Model with optional line receiver input(L1,L2) cannot output as output terminal will be input terminal <only LED can react>** |

| A | B | C | D | E | F |
|---|---|---|---|---|---|
| 0 | 5. | 0 | | | 0 |

**Selection of preset action**

0 : plus side 2 stages preset action
1 : ±each stage preset action
2 : batch count action (only the setting with automatic reset)
3 : plus 1 stage and secondary output action
(only the setting without re-output)

**Display selection**

0 : Display 1
1 : Display 2

**<Caution>**

Do not select display 2 when selecting A or -A with Mode 00 [measurement calculation method]

**[Display selection]**

Display 1 : Output against Display 1
Display 2 : Output against Display 2

**[Preset action selection]**

setting of output action
For the timing chart and setting condition,
refer to [output timing for preset action and setting condition]
* when changing setting, do so as display offset value
and preset value will be included in setting condition.

**<Caution>**

When Mode 05 to 07 are changed, DO NOT FORGET TO RESET BEFORE STARTING MEASURING.

## Output timing for preset action and setting condition

### 0: Plus side 2stages preset action

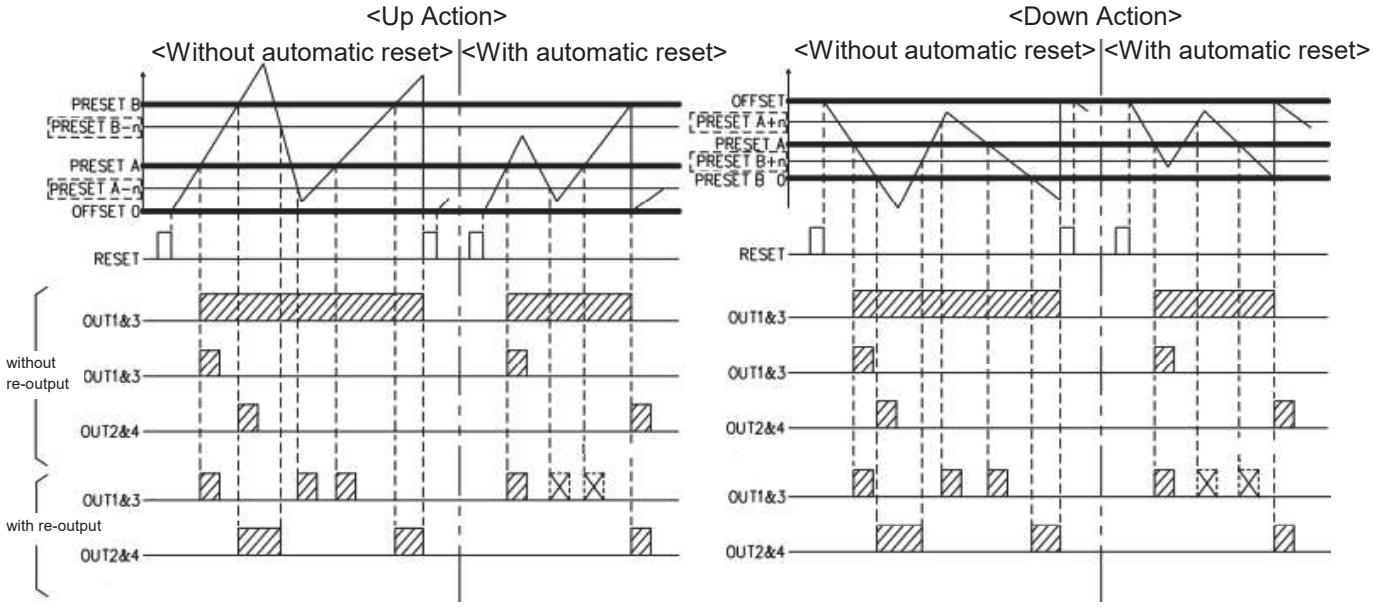


**Setting name (contents)**

PRESET A: 1stage setting value
PRESET B: 2nd stage setting value
OFFSET: Display value when reset (display offset value)

**Setting condition**

UP: Offset =0, OFFSET< PRESET A < PRESET B
DOWN: PRESET B=0, PRESET B< PRESET A < OFFSET

### 1: ±Each 1stage preset action

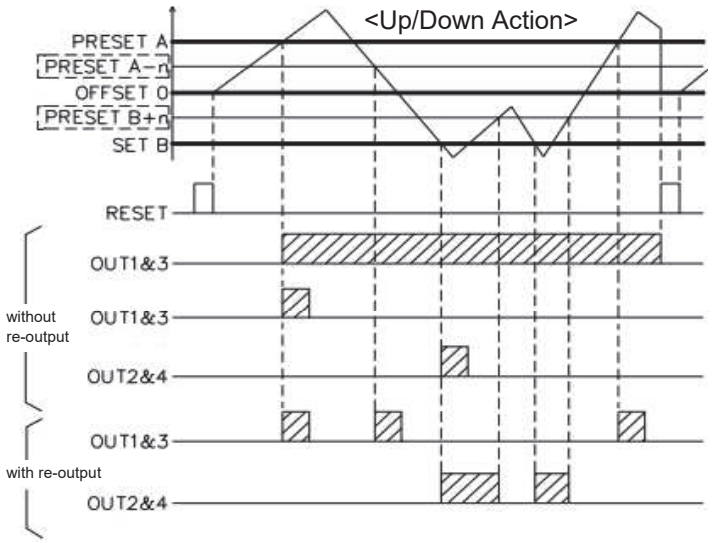


**Setting name (contents)**

PRESET A: Plus side setting value
PRESET B: Minus side setting value
OFFSET: Display value when reset (display offset value)

**Setting condition (set each item as follow)**

UP/DOWN: OFFSET=0, PRESET B< Offset < PRESET A

### 2: Batch count action

<Up Action>

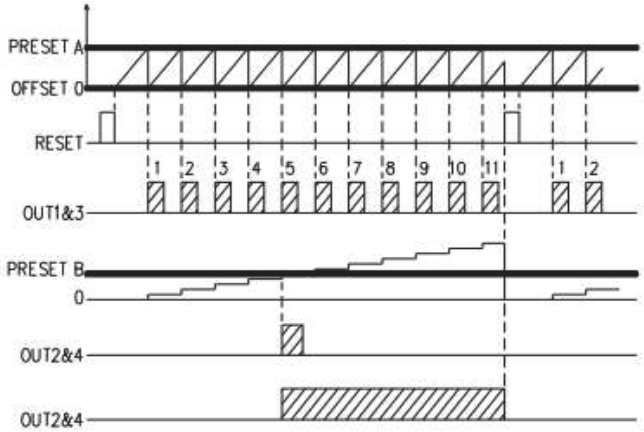


<Down Action>

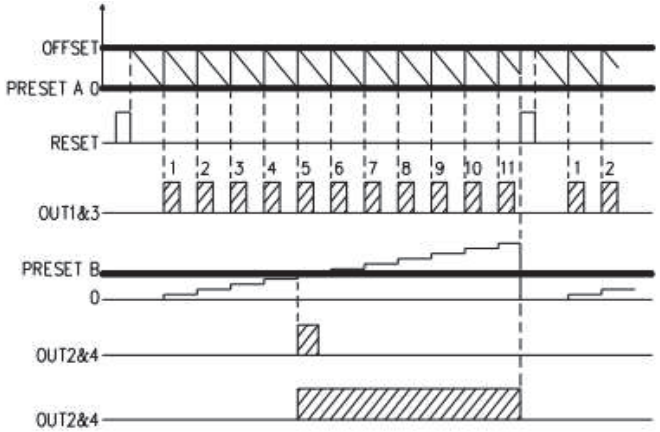


With this preset action, display will show batch count while pressing "Shift Key"

**Setting item (Contents)**

Preset A: Setting value of No.1 counter Preset B: setting value of batch count display
Offset: Reset display value (display offset setting value)

**Setting condition (set each item as follow)**

UP: offset=0, Offset < Preset A, Preset B > 0
DOWN: Preset3=0 Offset > Preset A, Preset B >0

### 3: Plus 1stage and secondary output action

<Up Action>

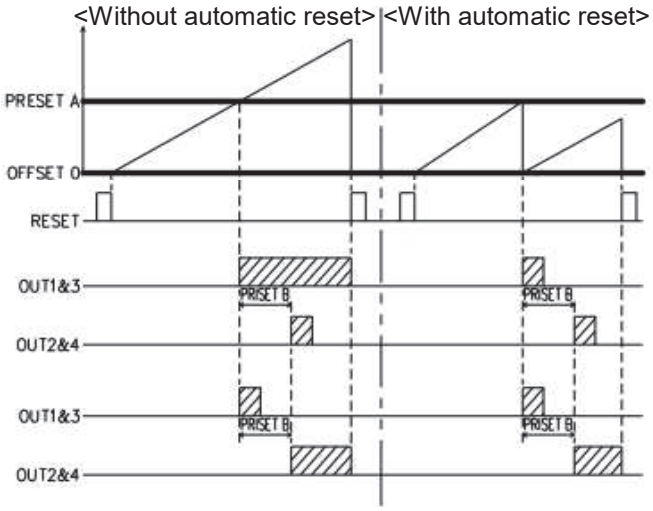


<Down Action>

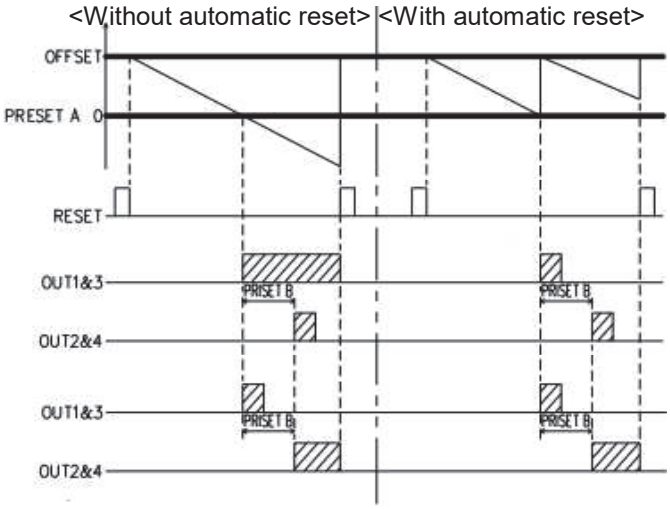


**Setting item (Contents)**

Preset A: Pulse setting value Preset B : Retardation setting value
Offset: Reset display value (display offset setting value)

**Setting condition (set each item as follow)**

UP: offset=0, Offset < Preset A, 99.9 ≥ Preset B ≥ 0
DOWN: Preset3=0 Offset > Preset A, 99.9 ≥ Preset B ≥ 0

Mode# **Alarm output: Setting of alarm output 2 (OUT 1-4)**

**0 6**

| A | B | C | D | E | F |
|---|---|---|---|---|---|
| 0 | 6. | 0 | 0 | | 0 |

**Re-output selection**
0: Without re-output
1: With re-output

**<Caution>**
This selection will be invalid when following mode is selected;
With automatic reset, batch count action,
puls 1 stage and secondary action

**Automatic reset selection**
0= without automatic reset
1= with automatic reset

**<Caution>**
This selection will be invalid when following mode is selected;
±each 1 stage preset action and batch count action

**UP/DOWN selection**
0: Up
1: Down

**<Caution>**
This selection will be invalid when ±each 1 stage preset action is selected.

**[UP/DOWN selection]**

UP- Alarm will ba activated when Display value ≥ Preset value (upper limit output action)
DOWN- Alarm will be activated when Display value ≤ Preset value (lower limit output action)
* Display offset value and preset value should be included in setting condition when setting is tobe changed.

**[Automatic reset selection]**

Without automatic reset- display value will not go back to display offset value when the output conditions are met.
With automatic reset- dusplay value will go back to display offset value when the output conditions are met.
Actions of each preset are as follows;

(1) Plus side 2stages preset action
UP: reset - Preset B ≥ display value - display value = display offset value - recount
DOWN: reset - Preset B ≤ display value - display value = display offset value - recount
(2) Batch count action
UP: reset - display value = display offset value - Preset A ≥ display value - display value = display offset value - batch count display plus 1 - recount
DOWN: reset - display value = display offset value - Preset A ≤ display value - display value = display offset value - batch count display plus 1 - recount
(3) Plus side 1stages secondary output action
UP: reset - Preset A ≥ display value - display value = display offset value - recount
DOWN: reset - Preset A ≤ display value - display value = display offset value - recount

**<Caution>**
Output mode is going to be 1 shot output when plus side 2 stages preset action or plus 1 stage and secondary output action is selected and add automatic reset function.

**0 6**

**[Re output selection]**

**- without re-output -**

Sequence output : once it is out, "output off" will not be activated even if it is not within tolerance (condition)
"output off" will be on when reset input and automatic reset functions

1 shot output : 1 shot of pulse with set duration will be output when output conditions are met.
After 1shot, no output will be made even if the output conditions are met.
Reset input or automatic reset can activate the output.

**- with re-output -**

Sequence output : Output will be ON when output only if condition are met.
However, re-output will be invalid when plus side 2 stages preset action (with automatic reset) is chosen

1 shot output : 1 shot of pulse with set duration will be output when output conditions are met.

**<Caution>**

When plus side 2 stages preset action(with automatic reset) and 1stage and secondary output action is chosen,
re-output will be invalid no matter what re-output setting is made.

| Mode# | Output alarm: setting of output alarm 3 (OUT1-4) |
|---|---|

**0 7**

| A | B | C | D | E | F |
|---|---|---|---|---|---|
| 0 | 7. | 1 | 3 | 1 | 3 |

**OUT 2&4 Duration of 1shot output**

| | | | |
|---|---|---|---|
| 0 : | 10 ms | 5 : | 250 ms |
| 1 : | 20 ms | 6 : | 500 ms |
| 2 : | 50 ms | 7 : | 750 ms |
| 3 : | 100 ms | 8 : | 1 sec |
| 4 : | 200 ms | 9 : | 2 sec |

**<Caution>**

Output 2&4's LED flashing might not be visible when 10ms is chosen although

**Out 2&4 Output mode**

0 : sequence output
1 : 1shot output

**OUT 1&3 Duration of 1shot output**

| | | | |
|---|---|---|---|
| 0 : | 10 ms | 5 : | 250 ms |
| 1 : | 20 ms | 6 : | 500 ms |
| 2 : | 50 ms | 7 : | 750 ms |
| 3 : | 100 ms | 8 : | 1 sec |
| 4 : | 200 ms | 9 : | 2 sec |

**<Caution>**

Output 1&3's LED flashing might not be visible when 10ms is chosen although

**Out 1&3 Output mode**

0 : sequence output
1 : 1shot output

**[ OUT1&3 or OUT 2&4 output mode]**

Sequence : Output will be activated when the conditions are met.
If it is beyound tolerance (condition), output will be OFF.

1 shot : 1 shot of pulse with set duration will be output when output conditions are met.

**[ OUT 1&3 or OUT 2&4 duration of 1shot output]**

Set the duration of 1shot output. (output margin is ±2ms)

**0 8**

| A | B | C | D | E | F |
|---|---|---|---|---|---|
| 0 | 8. | 0 | | 0 | 0 |

**Overscale display**
- 0 : 3rounds stop
- 1 : Endless
- 2 : Up key to show numbers of time go over (upper 2digits)

**External input function**
- 0 : Banned input
- 1 : Hold input
- 2 : Lap count input
- 3 : Display switch input

**Blank display**
- 0 : No Blank display (Display measured value)
- 1 : Blank display (No Display measured value)

**[Blank display]**

Set whether to display measured value or not. Only the measured value will blink when "blank display" is set.
Alarm output LED and hold LED will functuon normally.

**[External input function]**

Setting the function of terminal block 2 to 3. When it is ON, hold LED will blink.

| | |
|---|---|
| 0 : Banned input - | Bann the sensor input while ON |
| 1 : Hold input - | Keep displaying the current value while ON (blink when it functions) measurement is proceeding internally (overscale LED will be kept as well) |
| 2 : Lap count input - | Once it is ON, current value will be kept and blinking. Measurement is reset and start measureing again. Another ON will display the value calculated internally. |
| 3 : Switch display input - | Display 1 and Display 2 are switched at every ON. |

**0 8**

**[ Overscale display ]**

select the display method when value become more than "999999" or less than "-99999".

**0 : 3round stop**

Value blinks when value exceed "999999" or go below "-999999" for the third time.

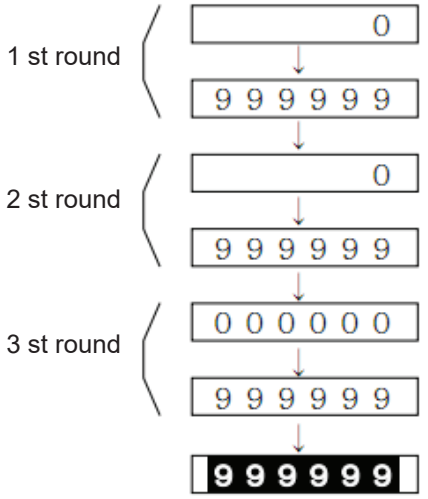


Start measurement

1st overscale display. OverscaleLED flashes.
Display will be ZERO with zero surporess

2nd overscale display.
Display will be ZERO without zero surporess

3rd overscale display. Display will blink at "999999".
measurement continues internally.

**1 : Endless**

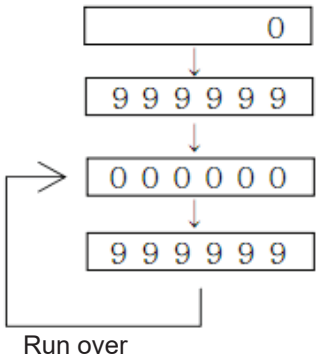


Start measurement

Overscale display. Overscale LED flashes.
Display will be ZERO without zero surpress

Mode#

**0 8**

**0 : Overscale times (upper 2digits) display**

Display will show how many times measurement went overscale while pressing Up key.
Over LED will disappear while pressing Up key and displaying overscale, but if it exceed 99times, over LED will blink.

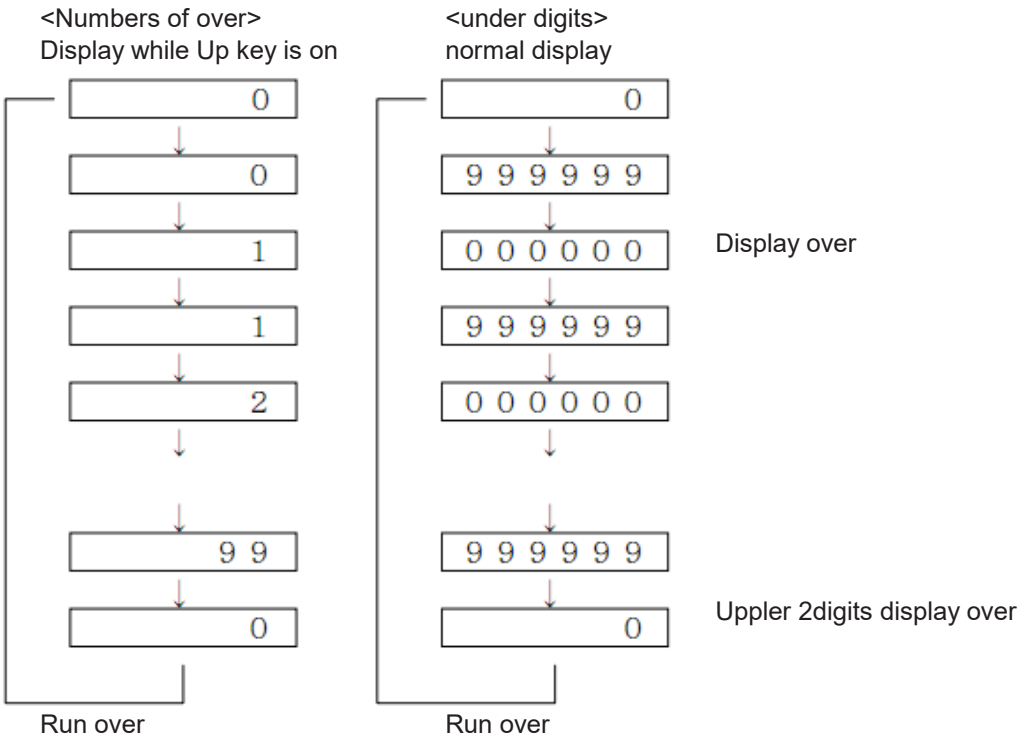


Zero surpress: delete "0" in the upper digits.

(sample) Displaying 100

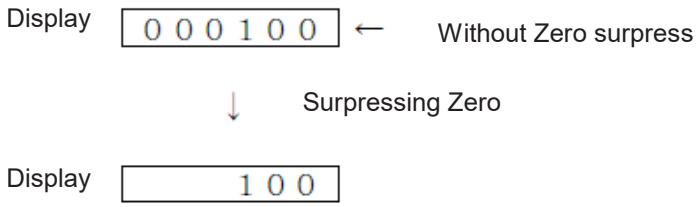

Mode# **Setting of the "Reset","Movement of Reset key","Selecting Reset Display", in Power ON**

**0 9**

| A | B | C | D | E | F |
|---|---|---|---|---|---|
| 0 | 9. | | 0 | 1 | 4 |

**Selecting of Reset Display**
- 0 : Display1, Display2 (Key input, movement Terminal Board Input)
- 1 : Current Display (Key input, movement Terminal Board Input)
- 2 : Display1 (Key input, movement Terminal Board Input)
- 3 : Display2 (Key input, movement Terminal Board Input)
- 4 : Key Input: Current Display,
  Terminal Board Input: Display1, Display2

**Action Mode of Reset key**
- 0 : Not Reset
- 1 : Reset in a bit
- 2 : Need pushing key for 1 seconds
- 3 : Need pushing key for 2 seconds

**Reset Node in Power ON**
- 0 : Not Reset
- 1 : Reset

**Reset Node in Power ON**

Select record measured value at last time or delete measured value at last time in Power ON
- 0 : You begin measuring from last measured value.
- 1 : The last measured value is deleted and You begin measuring from display offset value.

**Action Mode of Reset Key**

0 : Not Reset

1 : Reset in a bit

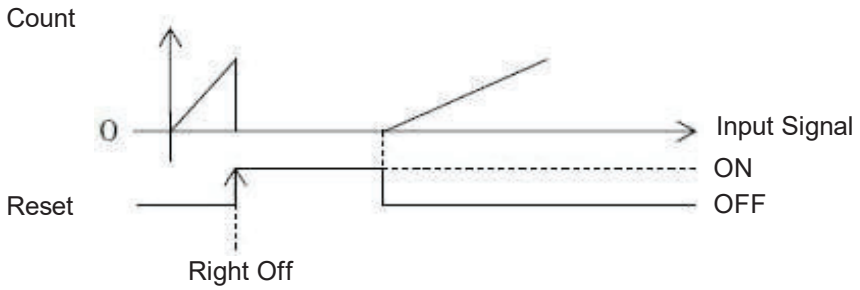


2 : Need pushing key for 1 seconds

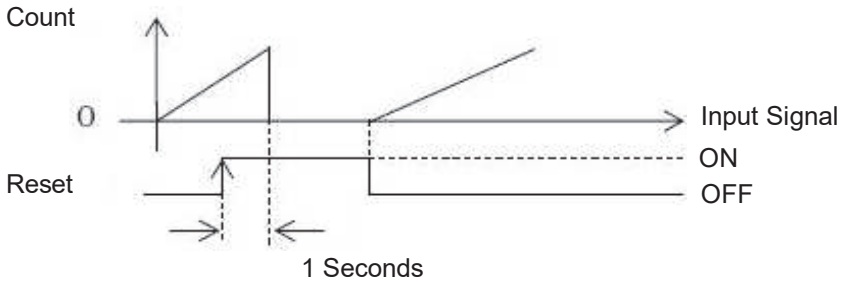

**0 9**

3 : Need pushing key for 2 seconds

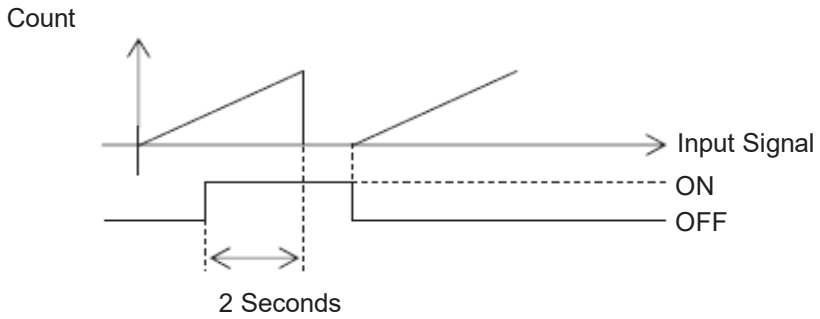


**Select of Reset Display**

Display1, Display2 : The integrated value is returned to display offset value.
All alarms are canceled.

Current Display : The integrated value is returned to display offset value.
The alarms of current display are canceled.

Display1 : The integrated value of display1 is returned to display offset value.
The alarms of display1 are canceled.

Display2 : The integrated value of display2 is returned to display offset value.
The alarms of display2 are canceled.

**1 0**

Need set it on the AV3-5/A1 option

| A | B | C | D | E | F |
|---|---|---|---|---|---|
| 1 | 0. | 0 | 0 | 0 | 0 |

**Analog Output**
- 0 : Synchronizing with indicated value
- 1 : Synchronizing with measurement

**Output Digits Selection**
- 0 : Right 4 digits (CDEF)
- 1 : Center 4 digits (BCDE)
- 2 : Left 4 digits (ABCD)

**Reverse Output Selection**
- 0 : Standard (0to10V, 0to5V, 1to5V, 4to20mA)
- 1 : Reverse (10to0V, 5to0V, 5to1V, 20to4mA)

**Analog Output Display Selection**
- 0 : Display1
- 1 : Display2

**Select of the Analog Output Display**

Select analog output display1 or analog output display2.

**Select of the Reverse Output**

Analog output is reversed.

**Select of the Output Digits**

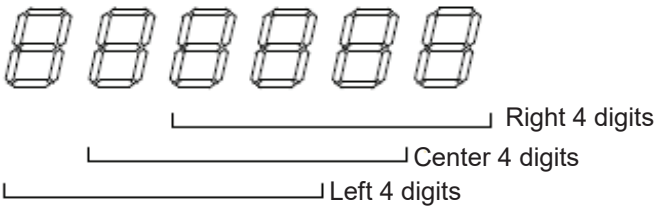


**Analog Output**

0 : Synchronizing with indicated value
Analog output to indicated value

1 : Synchronizing with measurement
Analog output to result of internal arithmetic

**1 1**

*** This setting is necessary when AV3-5/AI option is chosen.**

| A | B | C | D | E | F |
|---|---|---|---|---|---|
| 1 | 1. | 1 | 0 | 0 | 0 |

Display 0001 - 9999
( Do not set "0000" )

**[Setting the indicated value of Max. Analog output]**

Setting the indicated value of Max. Analog output.
Set 4 digits, and disregard the decimal point at that time.

**[example 1]**

Analog output is AV5(0-10V), Setting of maximum output when display is _ _ 1 0 0 0

| A | B | C | D | E | F |
|---|---|---|---|---|---|
| 1 | 0. | | | 0 | |

Mode 10
E : 0

| A | B | C | D | E | F |
|---|---|---|---|---|---|
| 1 | 0. | 1 | 0 | 0 | 0 |

Mode 11
C - F (Display is "1000" when output is maximum)

**<Caution>**

Analog output is a absolute value of display value.
Output is as shown in the figure below.

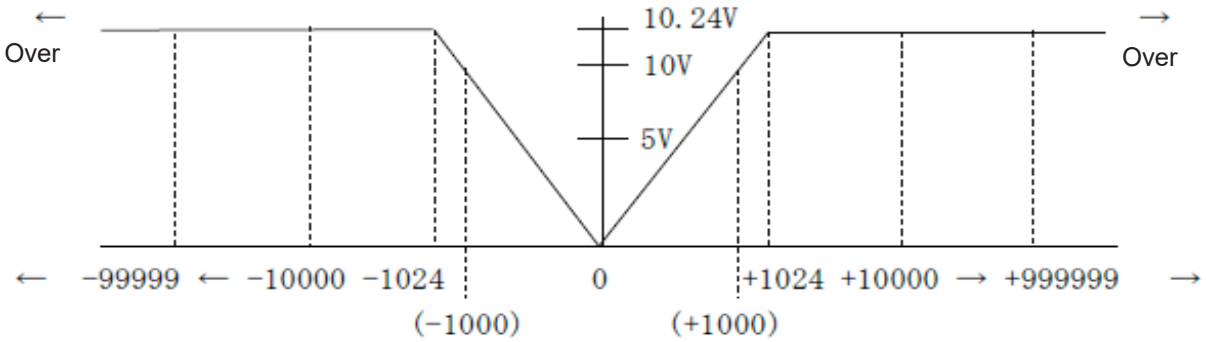


**[example 2]**

Output digits is 4 digits of left, Display is 2000 when maximum analog output, Range is 0to10Vdc.
It is shown in the figure below when these conditions,

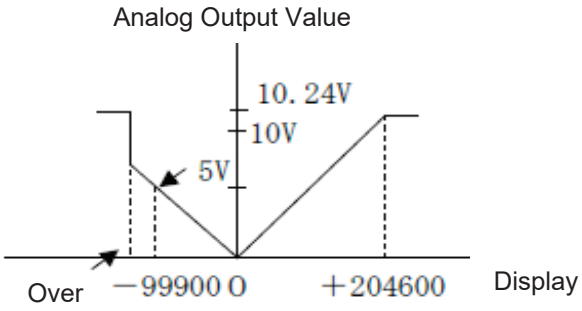

**1 2** *** This setting is necessary when B option is chosen.**

| A | B | C | D | E | F |
|---|---|---|---|---|---|
| 1 | 2. | 0 | | 0 | 0 |

**BCD Data Output Logic**
0 : Data (+), TI signal / Parity (+)
1 : Data (-), TI signal / Parity (+)
2 : Data (+), TI signal / Parity (-)
3 : Data (-), TI signal / Parity (-)

**BCD Data Output Timing**
0 : TI signal is used
1 : Request signal is used

**BCD Output Display selection**
0 : Display 1
1 : Display 2

**Select of the BCD Output Display**
Select BCD output display1 or analog output display2.

**BCD Data Output Timing**
0 : TI signal is used
Capture prohibition signal
1 :Request signal is used
The update of data is demanded.

**BCD Output Display selection**
Setting of the "Output display data","TI signal","Parity logic"
Positive Logic : The collector of output transistor and emitter are conducting.
Negative Logic : The collector of output transistor and emitter are not conducting.

| Logic | Display Value | Bit Data | | | | NPN Open Collector Output | | | |
|---|---|---|---|---|---|---|---|---|---|
| | | 8 | 4 | 2 | 1 | 8 | 4 | 2 | 1 |
| Positive Logic | 1 | 0 | 0 | 0 | 1 | OFF | OFF | OFF | ON |
| Negative Logic | 1 | 0 | 0 | 0 | 1 | ON | ON | ON | OFF |

**1 3**

*** This setting is necessary when BI option is chosen.**

| A | B | C | D | E | F |
|---|---|---|---|---|---|
| 1 | 3. | 0 | | 0 | 1 |

**BCD Data Input Logic**
0 : Hi Active (Each input terminal and GND are open.)
1 : Low Active (Each input terminal and GND are open.)

**Latch Signal Input Logic**
0 : Latch on short
1 : Latch on open

**BCD Data Input selection**
0 : Stall
1 : PRESET A
2 : PRESET B

**Select of the BCD Data Input**
Select BCD input for which preset.

**Latch Signal Input Logic**
Data is not input when latch signal is input.
0 : Latch on short - Data is not input when latch signal pin and GND are short.
1 : Latch on open - Data is not input when latch signal pin and GND are open.

**BCD Data Input Logic**
Setting of the Logic of BCD Data which is inputed.
0 : Hi Active - Data is input when each pin of input data and GND are open.
1 : Low Active - Data is input when each pin of input data and GND are short.

## 12. SETTING OF PRESET VALUE

Do the following operation for setting of the preset value of each alarm output.
Setting range is "-99999 - 999999.
Preset B's setting range is "0000.0 - 00099.9" when output is 1 stage and secondary output.
Decimal point synchronizes with setting of the "Mode00"(ref.P19-21).
Initial value is "999999"
Refer to "Mode05","Mode06","Mode07"(from P25 up) for setting of the alarm output action(OUT1&3, OUT2&4).

| Operation Key | Display | Operation |
|---|---|---|
| Mode | A B C D E F<br>9 9 9 9 9 9<br>OUT1 OUT2 OUT3 OUT4<br>● ○ ● ○ | Press Mode key more than 2 seconds.<br>OUT1&3's LED light, then PRESET of OUT1&3 is called. |
| | A B C D E F<br>9 9 9 9 9 9<br>OUT1 OUT2 OUT3 OUT4<br>○ ● ○ ● | → PRESET A → PRESET B →<br>PRESET Value is switched pushing Mode Key. |
| | A B C D E F<br>9 → 9 → 9 → 9 → 9 → 9<br>OUT1 OUT2 OUT3 OUT4<br>○ ● ○ ● | Change to right the position of flashing digit.<br>One hit makes 1digit move right hand side. |
| or | A B C D E F<br>9 9 9 9 9 9<br>OUT1 OUT2 OUT3 OUT4<br>○ ● ○ ● | Change the value of flashing digit.<br>One hit makes the value bigger/smaller by 1.<br>⇔ 0 ⇔ 1 ⇔ … ⇔ 9<br>Also, The indicator-A displays "-".<br>⇔ 0 ⇔ 1 ⇔ … ⇔ 9 ⇔ "– |
| ENT | A B C D E F<br>9 9 9 9 9 9<br>OUT1 OUT2 OUT3 OUT4<br>○ ● ○ ● | Register the set value. After finishing the setting,register setting with this key. After registration, measurment display will appear. |
| RST | | Return to measurement display without registering the set value. |

**Caution**

1. Do not turn off the power while registering the set value
   (from pressing ENT until return to measurment display)

2. Mode Protect does not function.

3. Reset it before starting measurement when PRESET Value is changed.

# NIDEC DRIVE TECHNOLOGY CORPORATION

〈Web Page Information〉 Please scan the QR code or access the URL below.

**Contact Us**
https://www.nidec.com/en/nidec-drivetechnology/inquiry/

**Sales Offices**
https://www.nidec.com/en/nidec-drivetechnology/corporate/network/sales/

Copyright NIDEC DRIVE TECHNOLOGY Corporation. All Rights Reserved.

NIDEC DRIVE TECHNOLOGY CORPORATION

Nidec Shimpo Corporation change its company name to Nidec Drive Technology Corporation on April 1, 2023.